NPD®
NATIONAL PARTS DEPOT

1966-1996

NPD® is not affiliated with or sponsored by the Ford Motor Company

5th EDITION

Parts for Bronco

Parts & Accessories that fit your Ford Bronco



Restoring American History® *since* 1976

Restore and modify your Truck with the industry's fastest parts delivery.

Here are the facts:



Andrew Gouge

To some extent, so many of the variables of your restoration depend on the supplier you select for your parts. In fact, slow, undependable, expensive parts suppliers have put a premature end to more than a few hopeful restorations. Let us show you how at virtually every turn in your restoration, NPD® helps move you ahead with the right parts at just the right time - and price, from bumper to bumper.

1-5 day delivery to most of the USA.
2 Fully-stocked warehouse-stores.

At the heart of our speedy service is a fully-stocked warehouse-store. If you refer to the color-coded map you'll see that no matter where you live, chances are our warehouse is close enough to deliver your parts in just 1-5 business days - *UPS ground!*

In-fact, most of our customers take delivery in 1 to 3 business days. In addition to 24-hour, 7-day per week order lines, each store is open to the public till 9:00 pm weekdays, 5:00 pm weekends!

97% initial order fill rate.
Sophisticated order fulfillment.

Our warehouse is FULLY-stocked with most everything you see in this catalog. While we



can't assure that every item will be in stock at all times, each warehouse boasts a remarkably high rate of initial order fulfillment - a 97% average! In the event of a true stock-out, the computer continually checks stock for the arrival of back ordered items and flags them for immediate shipment. It will also archive your invoice data and purchase history, so if a problem arises we can troubleshoot or trace your order.

Lowest overall shipping rates.
Free UPS ground shipping over $300.

We pay the shipping charges on UPS ground orders over $300! If your in-state order is below $300, you'll pay a mere 5%, with a $8.00 minimum. Out-of-state orders below $300 are charged 10% with a $8.00 minimum. UPS Oversize fees are extra. If that's not enough to make you smile, truck shipments are billed up front at our current costs based on negotiated discounts with freight carriers. UPS 2nd Day Air, UPS Next-Day Air, US Parcel Post, Federal Express, APO, FPO & overseas shipments are all easily handled upon request. We accept Visa, MasterCard, Discover, American Express and Western Union QuickCollect as payment.

Operating on your schedule:
24-Hours a day, 7-days per week!

Phone the warehouse toll-free, any time, any day, and you'll be greeted by a salesperson-not a computer voice or recorder. A knowledgeable parts person will build your



order, estimate shipping & delivery times, and if necessary assist in compiling an order. Our GOAL-Place your order before noon, Monday through Friday, and your parts will be packed and shipped by 5:00 that very afternoon.

Speed Quality Price Accuracy Courtesy

Let the NPD® sales team help speed your restoration



No one delivers faster than NPD®

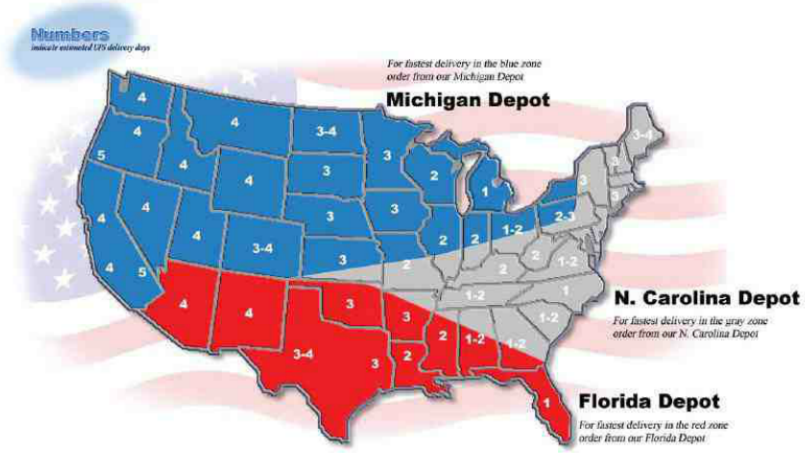

Our pricing advantage. Low overall prices vs "guaranteed pricing"

At a time when many are offering "guaranteed lowest pricing" we like to remind customers that this can be a misunderstood phrase. It seems to imply that a company has pre-matched the lowest price on every single part in the marketplace, thereby guaranteeing you the lowest prices. In fact, operating under a pricing guarantee, you could still place a 50-item order and pay more for every single part. The guarantee kicks in only if you are the rare person to do the required research and make a documented price challenge on each item for which you overpaid. Mindful of those who haven't the time or energy for this worthy pursuit, we take it upon ourselves to see that our pricing is as low as practical, across the board. If it looks like we are getting beaten on a given part, please let us know — chances are there's a good reason, such as quality differences.

Industry-leading quality.

Having our roots in the restoration business, NPD® is well aware of what it takes to build a show-winner. Replacement parts must be of the highest caliber, in materials as well as workmanship. All the products listed in this catalog represent the best in their categories. We offer parts from Ford original tooling whenever possible. NPD® will continually strive to offer those products which add to the authenticity & value of your classic, and to the pure pleasure and enjoyment for trucks of all years and methods of use.

Thanks for shopping with NPD®.

The Wise Choice

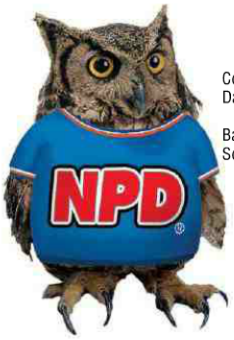

Cover truck provided by:
David Garton

Background image courtesy:
Source Interlink Media Archives

Back cover: Rob Cavill
Thank you all!

Note: All part descriptions with inclusions and exclusions refer to how the truck was originally equipped from the factory. Example: "W/3.54 FA ratio" refers to a vehicle that came from the FACTORY with a 3.54 front axle ratio.

Ford & Bronco are trademarks of the Ford Motor Company. All other trademarks remain the property of their respective companies.
National Parts Depot is not affiliated with or sponsored by the Ford Motor Company.

Quick Finder

Follow the color bars to your section.
See page 156 for a comprehensive index.

Seat Upholstery	4
Interior components	8
Interior Accessories	21
Truck Covers	22
Wheels and Covers	23
Brakes	24
Suspension	33
Steering	40
Cooling System	46
Engine Parts	51
Fuel System	60
Exhaust	65
Transmission	66
Driveshaft, Speedo, Axle	72
Starting, Charge, Ign'n, Wiring	79
Lighting	88
Horn and Wipers	96
Heat and A/C	98
Grille	102
Body Parts & Accessories	104
Bumper	117
Load, Tow, Hitch & Haul	119
Windows & Door internals	122
Weatherstrips/Rubber Parts	126
Locks	134
Moldings and Trim	135
Ornaments	136
Mirrors-Inside & Outside	138
Decals	140
Literature	142
Paint, Tools & Accessories	144
Extras, Order Forms/Info	151

Copyright © 2010 by National Parts Depot. All Rights Reserved • Proudly printed in the United States.

SEAT COVER



Taupe



Gray





Echo Leather.
Soft textured vinyl looks and feels like real leather at a fraction of the price.

03, Gray	F-SCEL2-14	34.95
03, Taupe	F-SCEL2-26	34.95
04, Gray	F-SCEL1-14	34.95
04, Taupe	F-SCEL1-26	34.95





LeTan
Rich simulated suede

03, camel	F-SCLT2-13	42.95
03, charcoal	F-SCLT2-19	42.95
04, Camel	F-SCLT1-13	38.95
04, Charcoal	F-SCLT1-19	38.95



Somerset





Mohave
Stylish southwestern look.

03, 04, Brown	F-SCMO1-02	29.95
03, 04, Wine	F-SCMO1-04	29.95
03, 04, Gray	F-SCMO1-14	29.95





Manorview
Soft velvet touch.

03, 04, Multicolored	F-SCMV1-30	35.95

Somerset
Soft knit velour fabric is comfortable and durable.

03, 04 , Burgundy	F-SCSS1-04	29.95
03, 04 , Beige	F-SCSS1-09	29.95
03, 04 , Charcoal	F-SCSS1-19	29.95







Regal Sport
Sporty multi-color design is machine washable.

03, 04, Blue	F-SCRS1-03	24.95
03, 04, Burgundy	F-SCRS1-04	24.95
03, 04, Camel	F-SCRS1-13	24.95
03, 04, Charcoal	F-SCRS1-19	24.95





Value Tweed
Durable woven tweed design.

03, 04, Brown	F-SCVT1-02	20.95
03, 04, Blue	F-SCVT1-03	20.95
03, 04, Burgundy	F-SCVT1-04	20.95
03, 04, Charcoal	F-SCVT1-19	20.95





Royal Velvet
Quilted elegance has OE quality and look.

03, 04, Blue	F-SCRV1-03	44.95
03, 04, Camel	F-SCRV1-13	44.95
03, 04, Gray	F-SCRV1-14	44.95
03 w/separate headrest, Blue	F-SCRV2-03	47.95
03 w/separate headrest, Camel	F-SCRV2-13	47.95
03 w/separate headrest, Gray	F-SCRV2-14	47.95





Spectra Cheyenne
Rugged woven tweed design.
Bench

50, Black	F-SCSC1-01	33.95
50, Brown	F-SCSC1-02	33.95



66–77 UPHOLSTERY SET, Standard

Sierra grain vinyl. Near perfect match to original! 66-67 buckets use SF-56 seat foam, 68-77 buckets use SF-8 seat foam. Add color code in parenthesis to end of base number. Ex: For Black "F-USDS-67VV-A". Black (A), Parchment (J), 66 Gray [silver] (E).
Front buckets only, pair.

66-67	F-USDS-66VV-_	186.95
68-77	F-USDS-67VV-_	186.95

Rear bench jump seat only. Arm rest covers sold separately.

66-67	F-USES-66VV-_	186.95
68-77	F-USES-67VV-_	146.95

Arm rest covers, rear seat. Vinyl only to recover existing pads, pair. Shown above.

68-69	Black	F-67112-1A	41.95
68-69	Parchment	F-67112-1J	41.95



78–79 UPHOLSTERY SET, Low-Back Bucket/Rear Bench

Corinthian grain vinyl/vinyl, not exact but a close rendition. Inc's upholstery for front and rear seats. Add color code in parenthesis to end of base number. Ex: For Black/black "F-USBS-78VV-A".
Black (A), Blue (C), Maroon (BB), Charcoal (EE), Gray (E), Ginger (G), Chamois (DD).

78-79	**OS**	F-USBS-78VV-_	451.95

78–79 UPHOLSTERY SET, Low-Back Bucket/Rear Bench

Corinthian grain vinyl/Encore velour inserts, not exact but a close rendition. Incl upholstery for front and rear seats. Must re-use Ford seat emblems. Add color code in parenthesis to end of base number. Ex: For Black/black "F-USBS-78VL-A".
Black (A), Blue (C), Maroon (BB), Charcoal (EE), Gray (E), Chamois (DD).

78-79	**OS**	F-USBS-78VL-_	498.95

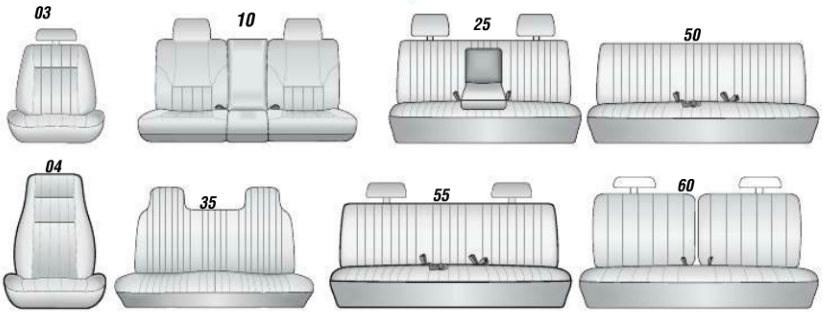



78–79 UPHOLSTERY SET, Split Front Bench/ Solid Rear Bench

Corinthian grain vinyl/vinyl, not exact but a close rendition. Incl upholstery for front and rear seats. Must re-use Ford seat emblems. Add color code in parenthesis to end of base number. Ex: For Black/black "F-USDS-78VV-A". UPS oversize.
black (A), blue (C), maroon(BB), charcoal (EE), gray (E), ginger (G), chamois (DD).
78-79 **OS** ..... F-USDS-78VV-_ 451.95

78–79 UPHOLSTERY SET, Split Front Bench/ Solid Rear Bench

Corinthian grain vinyl/Encore velour inserts, not exact but a close rendition. Incl upholstery for front and rear seats. Must re-use Ford seat emblems. Add color code in parenthesis to end of base number. Ex: For Black/black "F-USDS-78VL-A". UPS oversize.
black (A), Blue (C), maroon(BB), charcoal (EE), gray (E), chamois (DD).
78-79 **OS** ..... F-USDS-78VL-_ 499.95



F-USCS-80LL-J

80–86 UPHOLSTERY SET, Standard

Ft. High-back Captains chairs & rear bench. Corinthian grain vinyl/vinyl, not exact but a close rendition. Incl extra material for door panel inserts. Add color code in parenthesis to end of base number. Ex: For Black "F-USCS-80VV-A". UPS oversize.
80-83 black (A), 80-86 blue (C), 80-86 red (B), 80-82 sand (J), 80-86 chamois (DD), 80-82 green (R).
80-86 **OS** ..... F-USCS-80VV-_ 469.95

80–86 UPHOLSTERY SET, Deluxe

Front High-back Captains chairs & rear bench. Encore velour with Regal velour inserts, not exact but a close rendition. Incl extra material for door panel inserts. Add color code in parenthesis to end of base number. Ex: For Black "F-USCS-80LL-A". UPS oversize.
80-83 black (A), 80-86 blue (C), 80-86 dark blue (CC), 80-86 red (B), 80-86 sand (J).
80-86 **OS** ..... F-USCS-80LL-_ 541.95

87–91 UPHOLSTERY SET, Standard

NEW!

Ft. High-back Captains chairs & rear bench. Corinthian grain vinyl/vinyl, not exact but a close rendition. Incl extra material for door panel inserts. Add color code in parenthesis to end of base number. Ex: For gray "F-USCS-87VV-E". UPS oversize.
Dark blue (CC), red (BB), maroon (B), sand (D), charcoal (EE), gray (E).
87-91 **OS** ..... F-USCS-87VV-_ 498.95

87–91 UPHOLSTERY SET, Velour

NEW!

Ft. High-back Captains chairs & rear bench. Encore velour, not exact but a close rendition. Incl extra material for door panel inserts. Add color code in parenthesis to end of base number. Ex: For burgundy "F-USCS-87LL-B". UPS oversize.
Navy blue (CC), burgundy (B), sandstone (DD), dk charcoal (EE).
87-91 **OS** ..... F-USCS-87LL-_ 498.95



92–96 UPHOLSTERY SET, Velour

Ft. High-back Captains chairs & rear bench. Encore velour, not exact but a close rendition. Incl extra material for door panel inserts. Add color code in parenthesis to end of base number. Ex: For black "F-USCS-92LL-A". UPS oversize.
Black (A), navy blue (C), maroon (BB), sandstone (D), dk charcoal (EE).
92-96 **OS** ..... F-USCS-92LL-_ 469.95

92–96 UPHOLSTERY SET, Velour

Front split bench & rear bench. Encore velour, not exact but a close rendition. Incl extra material for door panel inserts. Add color code in parenthesis to end of base number. Ex: For black "F-USDS-92LL-A". UPS oversize. Black (A), navy blue (C), maroon (BB), sandstone (D), dk charcoal (EE).
92-96 **OS** ..... F-USDS-92LL-_ 541.95

SEAT FOAM



SEAT FOAM, Front Bucket

Professional grade, We've found this to be the best fitting, Just like original. Per seat.
66-67 Bucket SF-56 86.95
68-77 Bucket SF-8 86.95
Economy grade. Takes a little more work to fit but a better deal. Per seat.
66-67 Bucket SF-56A 51.95
68-77 Bucket SF-8A 51.95

TF =Truck Freight, OS =UPS Oversize.
See shipping information on inside back cover.



BOTTOM CUSHION ONLY:

Exact repro, cold process molded, spring guard reinforced. Professional grade.
78-91 W/bench seat, **OS** F-SF-BN-75-C 278.50
92-96 W/bench seat, **OS** F-SF-BN-92-C 278.50

SEAT FOAM, Rear Seat

68-77 Rear seat, back and cushion
..... F-SF-BNR-68B-A 59.95



Professional Hog Ring Plier Kit

Use the right tool for the job! Forged steel pliers have negative tension to hold hog ring in jaws. Approximately 250 hog rings included in kit.
7595-1K...28.95

TF =Truck Freight, OS =UPS Oversize.
See shipping information on inside back cover.

SEAT HARDWARE



Hog Ring Shearing Tool
Using a brand name wire cutter with a lifetime guarantee does nothing for your hands! They depend on crushing the wire and splitting it. This professional tool shears off the hog ring with less effort therefore protecting your hands!
..... 918-1 15.75



BURLAP SET, Seat Underlay
A must for nearly all seat jobs. Replace the rotted, worn, mouse eaten or mildewed material in there now. One set does either one bench or 2 bucket seats.
65-73 Set..... 918-2 16.95



65446 LISTING ROD SET, Front Bucket Seat
Fit inside listing pockets of upholstery that hog rings attach to. Usually rusted or too bent up to be of any use. Enough for both front buckets.
66-67 (8)..... 65446-1A 22.95
68-77 (4)..... 65446-3A 22.95



013190-1A

013190 MOUNTING PLATE, Seat Track
66-73 Correct shape, 8 pc set 013190-1A 9.95
66-73 Repro, generic not as nice as the -1A kits but competitively priced 013190-1B 0.95

F-60060-1



60060 TRIM PLATE, Rear Seat
78-79 Lower, metal..... F-60060-1 5.00



60310 STOP SET, Front Seat Back
Repro, (8), 2 upper oval & 2 lower round bumpers, 4 screws
68-72 Does one seat 60310-1 5.95
73-77 Takes 2 kits per seat, reqs 4 round and no oval stops 60310-1 5.95

63022 PIVOT PIN, Rear Seat Cushion
78-79 ..... F-63022-1 3.50



67438 SPRING, Rear Seat Check
78-79 Uses 2 378444-S plugs..... F-67438-1 4.95

378444 PLUG, Rear Seat Check Spring
78-79 Use with F-67438-1..... 378444-S 2.00

61705 MOUNTING KIT, Bucket Seat Track
NEW! 66-70 Nuts, original style (4) to floor
..... 61705-2K 6.00



61616/7 SIDE SHIELD, Bucket Seat
66 RH, best repro, modify for 67-69
..... 61616-1B 19.25
66 LH, best repro, modify for 67-69
..... 61617-1B 19.25

61617 MOUNTING KIT, Side Shield
66-68 Screws (6) 61617-1K 1.50
66 (16), Inc's side trim screws, pins and washers
..... 61617-1AK 7.00
66-68 Spacers and screws, 2 seats.. 61610-1A 9.95



61643 PLATE, Bucket Seat Back Adjuster
66-67 Repro, bucket, each 61643-1 3.50

61643 ADJUSTMENT KIT, Bucket Seat Back
66-67 Includes non-original plates & chrome adjuster screws for both seats, bucket 61643-1A 8.95
66-67 Adj'g screw only w/nut and washer, each
..... 61643-1K 4.00

61692-3-1B



61753-1

61692/3 COVER, Bucket Seat Side Hinge
Set of 4, RH and LH hinge covers:
66-67 Black, pair 61692-3-1A 13.50
66-67 White, paint to match, pair..... 61692-3-1B 13.50
Package has 2 sets (4 pc) of LH covers used on Bronco seats, paint as reqd:
68-77 Black F-61692-3-2A 34.95
68-77 White..... F-61692-3-2B 34.95

61753 ADJUSTING KNOB, Seat Track
66-96 Each, use with 62060-1..... 61753-1 9.25

62060 RETAINER, Adjusting Knob
NEW! 66-96 7/8" long, for 61753-1 ..... 62060-1 1.50



61828 SPRING KIT, Seat Track
66-68 3pc., does 1 seat track, w/bucket seat
..... 61828-1A 10.95

62543 RESTRICTOR CABLE ASSY, Front Seat
NEW! 80-86 ..... F-62543-1 11.50



62638 PIN KIT, Front Seat Pivot
66-68 Front seat pivot retainer pin kit (4), see 373249 below for washer..... 62638-1K 1.20



373249 WASHER, Bucket Seat Side Hinge Pivot
66-68 W/bucket seat, fiberboard protects upholstery, 4 pc kit..... 373249-SA 3.50



61610 SPACER KIT, Bucket Seat Side Shield
66 For 61616/7-1A side shields, per shield
..... 61610-1A 9.95

SEAT BELT



SEAT BELT, Replacement Style Lap

Less shoulder harness, per seat. Inc's hardware. 60" belts

66-73	Black	61172-1A	16.95
66-73	Dk. Red	61172-1B	16.95
66-73	Blue	61172-1C	16.95
66-73	Tan	61172-1D	16.95



SEAT BELT, Classic Look

Per person, chrome buckle. Mounting hardware included. black (A), bright red (B), maroon (BB), red (BBB), lt. blue (C), dk. blue (CC), white (E), saddle (FF), lt. green (G), parchment (J), turquoise (K). Add color code in parenthesis to end of base number. Ex: For black "F-61172-2A". 60" belts.

66-73		61172-2_	26.95



60262 COVER, Seat Belt Shoulder Strap

92-93	Granite, fits either side	F-60262-1E	4.00



610A88RETRACTOR, Seat Belt

An original dealer accessory. US made! Near perfect.

66-67	Each, repro	610A88-1A	24.95



61212 BOLT, Seat Belt Anchor

66-67	Orig. style repros, 2 bolts, 2 washers, 8 spacers	61212-1A	22.95
66-67	Rear seat, to floor, replm't, each	386274-S	10.51
68-79	To floor, replacement, each	386274-S	10.51

61216 PLATE, Seat Belt Anchor

66-79	Replacement style, not tapped, each	61216-1A	5.95
66-67	Fits behind center screw, pair	377902-S	1.50

TF =Truck Freight, OS =UPS Oversize.
See shipping information on inside back cover.



612A72BEZEL, Belt Buckle

68-70	Dlx interior, chrome, pair	612A72-1	27.95

612A72BEZEL & COVER, Belt Buckle

68-70	Deluxe int, chrome, set 4, 2 covers/2 bezels	612A72-1A	34.95

611C02 COVER, Belt Buckle Button

68-70	Deluxe int, black w/silver, 2 covers	611C02-1	5.95



61286 TONGUE COVER, Seat Belt

NEW!

83-96	Gray	F-61286-5E	4.95
83-96	Red	F-61286-5B	4.95



62672 HANDLE SET, Seat Back Release

70-77	Includes bezels	62672-2B	23.95

1968-77 Dash shown

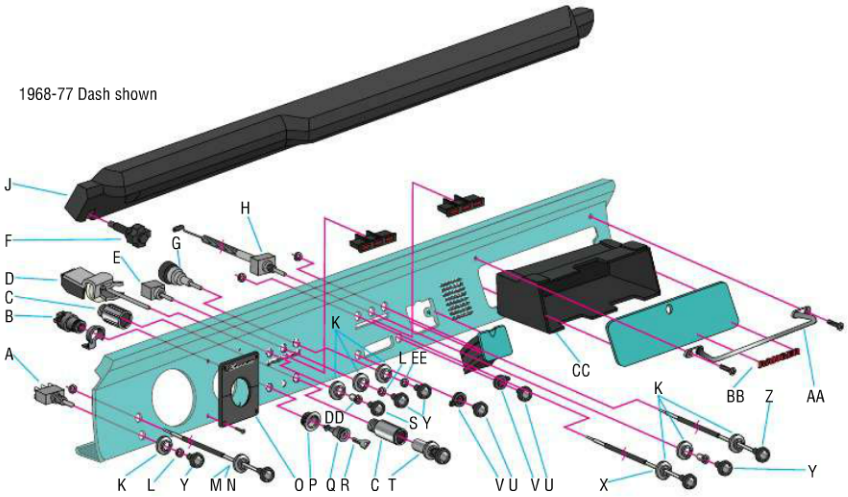

A	9A050	Switch, fuel tank selector	N	9775	Cable, dash control	Z	18518	Cable, heater
B	11572	Switch, ignition	O	01698	Cover, steering column	AA	04596	Assist handle, dash
C	15055	Socket, cigar lighter	P	11584	Bezel, ignition switch	BB	04460	Emblem, dash
D	11654	Switch, headlight	Q	11582	Cylinder & keys, ignition	CC	06010	Glove box
E	13A550	Switch, emergency flasher	R	22053	Key, ignition	DD	11650	Nut, head light bezel
F	03818	Knob, windshield set	S	11661	Knob & shaft, headlight switch	EE	17512	Nut, wiper bezel
G	17A553	Switch, wiper	T	15052	Knob & element, cigar lighter	Items in blue check listings for availability		
H	18578	Switch, heater blower	U	18817	Knob, radio			
J	04282	Dash pad	V	18830	Tone control, radio			
K	10852	Bezel, dash control	W	04810	Ash tray			
L	9A389	Bezel, switch	X	18552	Cable, heater			
M	9700	Cable, dash control	Y	17513	Knob, windshield wiper			

FIREWALL

01670 COVER, Firewall Underdash

Molded ABS covers with insulation and pre-cuts holes. A far better solution! Molded to fit over the trans hump and into heater wells. This cover makes any custom modifications, like aftermarket AC, a neat and clean proposition. The ABS material is paintable and is soil, scratch and scuff resistant. It's custom molded contours and highly efficient insulation layer make it the quietest and most thermal efficient firewall cover available. See our Acousti-Shield cab and floor insulators on page 19 for the most efficient and lightweight sound and thermal insulation system available for the rest of your cab.



66-77 **OS** F-01670-9 167.00



80-91 Rubber jute F-01670-10 180.00



01691 RETAINER, Firewall Insulation

69-78 Original rubber, set of 6..... 01691-02K 11.95

F-04459-1



04459 COVER, Steering Collar Opening Flange

See also 3530

87-91 Paint to match..... F-04459-2 132.45
95-96 Mocha, paint to match F-04459-5 125.00

DASH PAD



F-04282-1A



F-04282-3A

04282 DASH PAD

Year	Color	OE Tool	Price	Repro	Price
69-77	Also replaces 66-68, Black	-	-	F-04282-4A	263.95
78-79	Black	F-04282-3A	306.95	F-04282-3AR	179.95
78-79	Maroon	F-04282-3B	306.95	F-04282-3BR	CALL
78-79	Dark Blue	F-04282-3CC	306.95	F-04282-3CCR	196.95
78-79	Parchment, dyeable	F-04282-3D	306.95	F-04282-3DR	CALL
78-79	Lt Parchment, dyeable	-	-	F-04282-3DDR	CALL
80-86	Black	F-04282-6A	CALL	F-04282-6AR	CALL
80-86	Maroon	F-04282-6B	CALL	F-04282-6BR	CALL
80-86	Dk Blue	F-04282-6C	CALL	F-04282-6CR	CALL
80-86	Tan	F-04282-6J	CALL	F-04282-6JR	CALL

Dash pads are UPS oversize.



F-04282-6AA

04282 DASH TOPPER

Dashtop allows you to make fast, long lasting dash repair without killing your budget. It's a thermoformed polymer dash cover, used to renew damaged or cracked dash pads. It's contoured and textured to look exactly like your original dash. Installation takes less than 15 minutes and involves nothing more than a screwdriver and the supplied adhesive. Just prep the existing dash, apply the adhesive and fit the Dashtop over the old dash. You'll be surprised at the professional results. Available in black but may be dyed to match your interior using the vinyl spray paints listed at the end of this catalog. For colors add color code in parenthesis to end of base number. Example: F-04282-1AC

67-77 Black F-04282-30A 73.50
78-79 Black F-04282-3AA 71.95
78-79 Dark blue (**C**), bright red (**B**), buckskin (**D**), medium gray (**E**) ..... F-04282-3A_ 99.95
80-86 Black F-04282-6AA 96.95
80-86 Dark blue (**C**), dark red (**B**), saddle (**D**) ..... F-04282-6A_ 124.95
87-91 Black F-04282-7AA 88.50
87-91 Dark blue (**C**), dark red (**B**), saddle (**D**) ..... F-04282-7A_ 116.95
92-96 Black F-04282-8AA 96.95
92-96 Dark blue (**C**), dark red (**B**), saddle (**D**), gray (**E**) ..... F-04282-8A_ 124.95

Dash Toppers are UPS oversize.



01698 COVER PLATE, Steering Column

66-77 Custom black pebble grain with raised "Bronco" script highlighted in chrome, 2 pieces (upper/lower) F-01698-1A 24.95

TF =Truck Freight, OS =UPS Oversize.
See shipping information on inside back cover.



Andrew Gouge



*Throughout this catalog notations of "**RH**" (right hand) indicate the **Passenger** side. Notations of "**LH**" (left hand) indicate the **drivers** side.*

DASH PANEL



1E

10804 REGULATOR, Instrument Voltage

67-69 OE style 10804-2 24.95
78-79 OE style 10804-2 24.95

Electronic replacement, no adjustment necessary, more reliable, constant 5v output as required, patents pending, 90 day mfgr limited warranty, patent pending, **battery must be disconnected prior to installation *

66-79 Electronic replacement 10804-1E 59.95

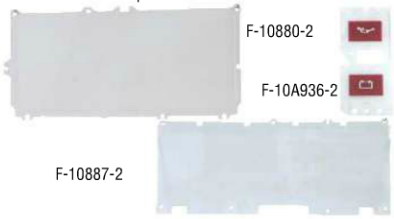

F-10880-2

F-10A936-2

F-10887-2

10880/7 LENS, Instrument Cluster

78-79 Original Ford tooling F-10880-2 24.95
80-86 W/o trip odometer F-10887-2 21.75
87-91 W/o trip odometer F-10887-3 24.95
92-96 ..... F-10887-5 31.48

10883 TEMPERATURE GAUGE, NOS Original

NEW! 80-86 ..... F-10883-8 72.57

10A936LENS, Instrument Warning Lamp

80-86 W/alt and oil warning lamps, graphics for oil and alt F-10A936-2 59.95



04388 TRIM MOLDING, Dash Board Glove Box

78-79 Chrome with black, original Ford tooling F-04388-1 49.95
78-79 Chrome with woodgrain, original Ford tooling F-04388-2 64.95



10848 BACKING PLATE, Instrument Cluster

78-79 W/gauges, as original, white plastic F-10848-12 66.95
78-79 W/warning lights, as original, white plastic F-10848-13 66.95

Dakota Digital



10848 DIGITAL DASH ASSY

Digital speedometer, fuel, oil press, water temp, voltage, indicator for high beam and turn signals, bar graph tachometer, blue illumination.

66-76 Mounts to original bezel F-10848-8A 549.95
66-76 Dimmer switch, digital dash light, factory dimmer will not work with digital gauges 11A654-1A 34.95

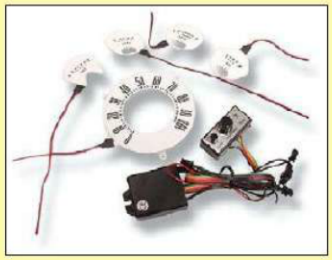

10890 ELECTROLUMINESCENT GAUGE KIT

Easily mounts over old gauge faces. Light intensity can be adjusted as can color from soft blue to soft green.

66-77 ..... F-10890-7E 99.95

10A840 BEZEL & LENS, Brake Warning Light

67 On dash, right of steering wheel top left position, repro F-10A840-1A 24.95



13711 Socket, Instrument Lamp

68-96 Each C-9744-151A 1.95

04460 ORNAMENT, Instrument Panel



78-79 "Custom", on glove box finish panel F-04460-17 24.95
NEW! 87-91 (from 6/87), "Custom" F-04460-4 7.95



77 "Ranger", on glove box finish panel F-04460-18 29.95



78-79 "Ranger XLT", on glove box finish panel F-04460-19 29.95



82-86 "XL" ..... F-04460-1 CALL



82-86 "XLT" F-04460-2 34.95
87-81 "Bronco" F-04460-10 5.95
87-91 "XLT Bronco' F-04460-8 5.95

92-96 "XL" F-04460-13 41.15

044D70/71 FINISH PANEL, Instrument Cluster



78-79 W/radio, w/o A/C, black, OE tool F-044D70-1 99.95



78-79 W/integral A/C and radio, black, OE tool F-044D70-2 119.95



78-79 W/radio, w/o A/C, woodgrain, original Ford tooling F-044D70-48 134.95



78-79 W/radio, w/A/C, woodgrain, original Ford tooling F-044D70-49 149.95



87-91 Center, black F-044D70-30 75.58
NEW! 89-91 (from 12/88), lower cluster, w/ E4OD A/T, RH, black F-044D70-28 29.95



92-93 Cluster, black, w/o rear defroster F-044D70-37 168.72



94-96 Cluster, black, gas, w/electric transfer case, w/o rear defrost F-044D70-45 124.87
94-96 Cluster, black, gas, w/manual transfer case, w/o rear defrost F-044D70-46 160.15

044D70FINISH PANEL, Dash Panel

RH, Woodgrain, w/nameplate holes

82-84 W/o radio & clock ..... F-044D70-50 CALL
82-84 W/o radio ..... F-044D70-51 CALL
85-86 W/o radio & clock ..... F-044D70-52 CALL

RH, Woodgrain, w/o nameplate holes

85-86 W/o radio & clock, w/o name plate holes ..... F-044D70-53 CALL



04596 ASSIST HANDLE, Passenger

66-77 At dash & cargo area, chrome F-04596-1 34.95

DASH CONTROLS

See also electrical-ignition section for ignition switches and components; heater section for heater switches, cables, knobs and bezels; Wiper section for wiper switches, cables, knobs and bezels; fuel section for choke or fuel tank cables, knobs, switches and bezels; Lighting section for emergency flasher lights, bezels and switches.



10B924 SWITCH ASSY., Seat Belt Warning Indicator

84-90 Also works for head light on warning F-10B924-2 21.75



9270 KNOB, Dash

See also listings under 9700 and 18519

66 ..... F-9270-3A 5.95

9700 KNOB, Cable End

See also 18519, 9270

66 Heater temperature & heater switch control F-9700-11 5.95

18519 KNOB, Dash Controls

See also 9270, 9700



85 (b4 3/85), wiper, heater, A/C, aux. heater, aux. A/C, aux fuel F-18519-3 13.00
85-93 (from 3/85), wiper, heater, A/C, aux. heater, aux. A/C, aux. fuel F-18519-4 19.94



92-96 Heater/A/C control F-18519-5 9.87



18545 BEZEL NUT, Heater Switch

66-77 ..... F-18545-1 7.50



18578 SWITCH ASSY., Heater

See also 19986 AC switches

67-77 Front heater, incl cable, orig. Ford tooling F-18578-14 42.50
78 (b4 ser#CA0,001), w/int. A/C . F-18578-15 24.25
80-89 W/integral A/C F-18578-8 23.75
80-82 W/dealer A/C 19986-7 35.95
83-89 W/dealer A/C F-18578-10 94.95
87-89 W/integral A/C F-18578-11 31.75
75-91 Heater, replacement F-18578-12 20.95
90-91 W/A/C, factory or dealer installed F-18578-8 23.75
92-96 W/A/C, factory or dealer installed F-18578-16 12.50



17513 KNOB, Heater Fan Switch

66 Correct style, repro F-17513-4A 9.95
67-77 Original F-17513-6 40.88
67-77 Repro F-17513-6A 12.50

WIPER SWITCH



10852 BEZEL, Wiper

66-72 Wiper switch, chrome w/black lettering, correct for 69, replacement for 66-68..... F-10852-12 14.95
73-77 Wiper switch F-10852-14A 14.95
68-77 Wiper washer switch, electric wipers F-10852-15A 14.95



11500 SWITCH ASSY., Windshield Washer Push Button

66-69 Vacuum wipers F-11500-1 11.95

17512 BEZEL NUT, Wiper Switch

73-86 Original F-17512-3 12.42
73-86 Repro F-17512-3A 7.95



17513 KNOB, Windshield Wiper

69-77 W/electric wipers, wiper, orig. F-17513-6 40.88
69-77 W/electric wipers, wiper, repro F-17513-6A 12.50
78-79 Wiper F-17513-7 31.14
80-84 Wiper F-17513-8 38.62
85-93 Wiper F-17513-9 12.57

See 11500 for vacuum wiper washer pump button.

17A553 SWITCH ASSY., Electric Wiper

See 13K359 below for wiper/turn signal switch replacement.



69-77 W/2 speed electrical wipers, 7 terminals F-17A553-5 62.95
78-79 W/o intermittent wipers..... F-17A553-6 66.95



78-79 W/intermittent wipers..... F-17A553-7 108.50



80-91 W/o intermittent wipers..... F-17A553-8 54.95
80-91 W/intermittent wipers..... F-17A553-9 61.50

IGNITION SWITCH





11572 SWITCH ASSY., Ignition

66-77	Original style	11572-2	49.95
66-77	Replacement	11572-2A	11.95
78-79		F-11572-8	36.95
80-86		F-11572-9	18.50
87-89		F-11572-10	21.50
90-91		F-11572-11	13.70
92-93		F-11572-12	101.95
92-96	Replacement style	F-11572-13	22.75
95-96		F-11572-14	28.75



11582 CYLINDER AND KEYS, Ignition

66-77		11582-1	7.95
78	(b4 78 ser#CA0,001)	F-11582-4	8.25
78-79	(from 78 ser#CA0,001)	F-11582-5	22.25
80		F-11582-6	25.50
81-84		F-11582-7	17.95
85-91		F-11582-8	14.95
92-95	W/o anti-theft	F-11582-9	42.50
NEW! 95-96	Black, original	F-11582-10	44.95
NEW! 95-96	Black, repro	F-11582-10A	30.50

See also LOCK section for matched ignition & door cylinders.





11584 BEZEL, Ignition Switch

66-77	Original	F-11584-2	70.00
66-77	Repro, exact details better chrome	F-11584-2A	22.95
78-79	Original	11584-2	24.13
78-79	Repro, exact details better chrome	11584-2A	11.95

HEAD LIGHT SWITCH



10852 BEZEL, Dash

66-77	"Lights"	F-10852-6	17.50

TF =Truck Freight, OS =UPS Oversize.
See shipping information on inside back cover.



11650 NUT, Headlight Switch

66		F-11650-4	10.95
68-77		F-11650-4	10.95
78-79	Original Ford tooling	F-11650-5	14.50
NEW! 80-89	Original Ford tooling	F-11650-5	14.50







11654 SWITCH ASSY., Headlight

66-76	(b4 76 ser#C25,001), OE supplier	11654-6	40.95
NEW! 66-76	(b4 76 ser# C25,001), repro	11654-6A	14.95
76-77	(from 76 ser#C25,001), modifications required for proper fit	F-11654-9	53.75
78-79		11654-5	37.95
80		F-11654-11	49.50
81-86		F-11654-12	32.50
87-96	Motorcraft	F-11654-13	32.50
87-96	Replacement	F-11654-13A	19.95

11661 KNOB & SHAFT ASSY., Headlight



66	Black knob, 3 1/4" shaft	F-11661-6A	9.95



68-77		F-11661-9	10.00
NEW! 80-89		F-11661-10	14.92



CIGAR LIGHTER



15055 ACCESSORY SOCKET EXTENSION, Cigar Lighter

Plugs into lighter socket and allows the simultaneous use of extra items that require a lighter socket for power. Great for combined use of mobile phones, TV's and detectors.

12v, solid box type w/2 sockets		F-15055-11	6.50
12v, mounts 3 accessories instead of 2, has pivoting head		F-15055-11A	13.75



15A044 CIGAR LIGHTER/SOCKET KIT

68-79		F-15A044-1	24.95
80-96		F-15A044-2	22.51



15052 KNOB and ELEMENT, Cigar Lighter

80-91	Bright finish knob	F-15052-4	9.96
92-96	Plastic	F-15052-5	9.96



15052 KNOB, Cigar Lighter

66	OE style	F-15052-2	7.95



15054 ELEMENT ASSY., Cigar Lighter

66-77	May need to replace bezel with their original, less knob, exact repro, w/1 1/8" bezel, "Lighter"	15054-2	8.25



15055 SOCKET & RETAINER ASSY, Cigar Lighter

66-77	OE style	F-15055-1	14.95
66-77	Original, limited NOS stock availability	F-15055-2A	9.95
66-77	Replacement style	F-15055-2	5.00
78-79		15055-1	5.75
80-89		15055-1	5.75
90-92		15055-1	5.75
92-96		F-15055-7	8.31

RADIO/ANTENNA

AM/FM Cassette decks that install in your classic Truck with no dash modifications!

KHE AM/FM cassette decks have been modified and fitted with new face plate trim custom designed to fit your classic Truck with no dash alterations. Since the work is performed by factory approved technicians, your unit comes to you with it's original warranty intact.



KHE-100 Custom 100 Watt Powerhouse!

100 watts (4 x 25) of clear power! 30 presets (18 FM, 12 AM), Auto reverse, locking fast forward and rewind, seek, preset scan and auto store, dynamic noise reduction, clock, separate bass, treble, fade and balance controls, RCA preout. (Running horse label not included!)

78-79 ..... F-18000-6D 204.95

KHE-200 Custom 200 Watt Powerhouse!

200 watts (4 x 50) of clear power! 30 presets (18 FM, 12 AM), Auto reverse, locking fast forward and rewind, seek, preset scan and auto store, dynamic noise reduction, clock, separate bass, treble, fade and balance controls, RCA preout. (Running horse label not included!)

78-79 ..... F-18000-7D 249.95



JVC 12 DISC CD Changer

Worlds smallest CD changer! Shockproof full-floating mechanism. High-precision 3 beam laser pickup. Track error recovery. 1-bit DAC, Fast CD access and see-through magazine with lock function. Smart eject. Angle mounting capability, mounting brackets are supplied. J-link connection. Works with both radios sold above. Control via remote and display unit.

66-96 Inc's remote and display unit . 18D806-2 354.95



18813 ANTENNA ASSY, Radio

Includes mast, base, wire, ect.

66-77 Exact repro, complete assembly F-18813-12 89.95
78-79 Fender mount, NOS original ... F-18813-6A 64.95
78-79 Fender mount, repro F-18813-6B 74.95
78-79 3 section mast, w/cables F-18813-9 13.95
80-86 Fender mount, exact repro F-18813-11 78.95
80-86 Fender mount, exact repro F-18813-11 78.95
NEW! 92-96 Black, w/o CB F-18813-13 25.17

18A886 MAST, Radio Antenna

Replacement mast only. Screw-in, as original.

78-79 W/o CB F-18A886-2 29.37
80-96 W/o CB, bright F-18A886-3 13.78
92-96 Black, w/o CB F-18A886-4 40.00

F-18830-1





F-18830-4

18817 KNOB, Radio

68-77 ..... F-18817-4 12.50
85-91 Excl electronic radio F-18817-3 22.47



18830 TONE CONTROL, Radio Knob

66-77 Pair F-18830-7A 33.95



18832 CAPACITOR, Radio Voltage Regulator

80-96 (from 2/80), at ignition coil F-18832-4 9.58

18A908GROMMET, Antenna Wire Lead-In

NEW! 80-86 ..... F-18A908-1 2.00



18919 STANCHION, Antenna

66-77 Inc's stachion, nut retainer & gasket, exact, round F-18919-2A 24.95

ASH TRAY

F-04810-5



F-04820-2

04810 INSERT, Ash Tray

94-96 Mocha, paint to match F-04810-5 100.00

04820 INSERT/BOX, Ash Tray

92-96 Inst. panel F-04820-2 50.00

TF =Truck Freight, OS =UPS Oversize.
See shipping information on inside back cover.

GLOVE BOX

060A08CABLE, Glove Box Door

NEW! 80-86 ..... F-060A08-2 7.02

06010 GLOVE BOX



66-71 Correct style F-06010-14 11.30
NEW! 66-71 Plastic, easier to install and will not disintegrate when wet F-06010-14P 26.95



72-77 Correct style F-06010-15 11.30
NEW! 72-77 Plastic, easier to install and will not disintegrate when wet F-06010-15P 26.95



78-79 ..... F-06010-9 12.95



80-85 (b4 2/85), w/o integral A/C, original F-06010-10 59.95
80-85 (b4 2/85), w/o integral A/C, repro F-06010-10A 10.45



80-85 (b4 2/85), w/integral A/C, repro F-06010-11 6.55



85-86 (from 2/85), w/o integral A/C . F-06010-12 35.28



85-86 (from 2/85), w/integral A/C F-06010-13 119.95



06036 FINISH PANEL, Glove Box Door

78-79 Woodgrain and black F-06036-1 34.95



06050 HINGE, Glove Box Door

80-86 ..... F-06050-3 150.67



06069 SPRING, Glove Box Door

78-79 ..... F-06069-3 2.00



F-06066-4



F-06066-5

06066 BUMPERS, Glove Box Door

66-77 Pair F-06066-5 4.95
78-79 2 reqd..... 06010-2K 2.00

06072 LATCH, Glove Box Door



3

80-85 Locking, console, chrome button
..... F-06072-3 36.53
80-85 (b4 4/85), locking, inst. panel w/chrome button
..... F-06072-3 36.53



F-06072-2



F-06072-4

80-85 Non-locking, inst. panel F-06072-2 22.50
80-85 Non-locking, console F-06072-2 22.50
85-86 (from 4/85), locking, inst. panel, black button
..... F-06072-4 51.38
86-89 Locking, console, black button
..... F-06072-4 51.38

F-06072-5



F-06072-6

87-89 Locking, inst. panel, black..... F-06072-5 19.48
90 Locking, inst. panel, paint to match
..... F-06072-6 40.00
91-96 Locking, inst. panel, black..... F-06072-5 19.48



91 Locking, floor console..... F-06072-7 86.05



06081 LATCH ASSY, Glove Compartment

78 Locking, repro..... 06081-1 21.95

DOOR PANEL

See also the DOOR/WINDOW section for parts not found here.

DOOR PANEL 1966–77



Replacement style in molded plastic, pair

68-72 Flat, black, **OS** F-DPR-68B-AA 101.95
68-72 Flat, parchment, **OS**..... F-DPR-68B-DA 148.50
68-72 Pleated, black, **OS** F-DPR-68B-AB 101.95
68-72 Pleated, parchment, **OS**..... F-DPR-68B-DB 148.50



Sierra grain vinyl. Near perfect reproduction of the original panels. Exact match for our Bronco seat upholstery sets in the seat section. Pair. Note: gray is not original but offered to match the 66 gray upholstery. UPS oversize

66 Gray, pleated, pair, woodgrain insert
..... F-DPR-68B-EC 121.50
66 Gray, pleated, pair, chrome insert
..... F-DPR-68B-ED 121.50
68-77 Black, pleated, pair, woodgrain insert
..... F-DPR-68B-AC 121.50
68-77 Black, pleated, pair, chrome insert
..... F-DPR-68B-AD 121.50
68-77 Parchment, pleated, pair, woodgrain insert
..... F-DPR-68B-DC 121.50
68-77 Parchment, pleated, pair, chrome insert
..... F-DPR-68B-DD 121.50

23943 MOUNTING KIT, Door Panel

66-77 (16), as many as 50 pcs may be req'd, mounts door panels and seat back panels... 23943-1K 2.50

DOOR PANEL 1978–79



Replacement Style. Pair. Molded plastic with molded-in armrests. Add color code in parenthesis to end of base number. Ex: for blue F-DPR-73-B. UPS oversize

78-79 Replacement full panel, black, **OS**
..... F-DPR-73-A 129.95
78-79 Blue (**B**), red (**C**), buckskin (**D**), gray (**E**)
..... F-DPR-73-_ 176.95



Replacement OE style. Molded plastic panels accept OE style padded armrests. Pair. Add color code in parenthesis to end of base number. Ex: For blue F-DPR-74-B.

78-79 Black, **OS**..... F-DPR-74-A 139.95
78-79 Blue (**B**), red (**C**), buckskin (**D**), gray (**E**)
..... F-DPR-74-_ 186.95



Original Ford tooling! Includes arm rest pad and fasteners, UPS oversize:

Color	***LH***	***RH***	***Price/each***
Black, w/o trim	F-23943-8	F-23942-8	99.95
Black, with XLT chrome grille and mldg	F-23943-8A	F-23942-8A	114.95
Blue, w/o trim	F-23943-10	F-23942-10	99.95
Blue, with XLT chrome grille and mldg	F-23943-10A	F-23942-10A	114.95
Red, w/o trim	F-23943-43	F-23942-43	99.95
Red, with XLT chrome grille and mldg	F-23943-43A	F-23942-43A	114.95

23942 FASTENER KIT, Door Panel

78-79 6 pcs.....F-23942-7K 2.00

DOOR PANEL 1980–86



Replacement style-molded plastic:
Add color code in parenthesis to suffix to indicate color choice. Example: for black F-DPR-80A-A, black (A), blue (B), red (C), saddle (D). Pair. UPS oversize
80-86 Prices: Black $158.50, Colors $204.95

80-86 No power, button lock ..... F-DPR-80A-_
80-86 No power, w/slide locks ..... F-DPR-80B-_
80-86 W/PW, w/o power locks ..... F-DPR-80C-_
80-86 W/power locks, w/o PW ..... F-DPR-80D-_
80-86 W/PW and power locks ..... F-DPR-80E-_

DOOR PANEL 1987–91

F-DPR-87E-C



Replacement style-molded plastic:
Add color code in parenthesis to suffix to indicate color choice. Example: for black F-DPR-87A-A, black (A), 87-91 graphite (AE), blue (B), red (C), saddle (D). Pair. UPS oversize

87-91 No power, w/cloth insert, black F-DPR-87A-A 201.95
87-91 No power, w/cloth insert, colors ..... F-DPR-87A-_ 248.95
87-91 PW & pwr locks, w/cloth inserts, black F-DPR-87E-A 201.95
87-91 PW & pwr locks, w/cloth inserts, colors ..... F-DPR-87E-_ 248.95

NOS Original
NEW! 89-90 LH, blue, vinyl, NOS, **OS** F-23943-36 149.95

23942 FASTENER KIT, Door Panel

80-91 6 pcs F-23942-8AK 3.00

DOOR PANEL 1992–96



CLOTH/VINYL. These are original Ford manufacture. We have only limited quanities of each part number. Once they're gone, they're gone. UPS oversize

92-93 RH, w/manual windows, dk charcoal F-23942-50A 249.95
92-93 RH, w/manual windows, scarlet F-23942-50B 249.95
92-94 LH, w/manual windows, scarlet F-23943-50B 249.95
92-93 RH, w/manual windows, blue. F-23942-50C 249.95
92-93 LH, w/manual windows, blue F-23943-50C 249.95
92-93 RH, w/manual windows, mocha F-23942-50D 249.95
92-93 LH, w/manual windows, mocha F-23943-50D 249.95
92-93 XLT, RH, w/PW, scarlet..... F-23942-51B 249.95
92-93 XLT, RH, w/PW, crystal blue ... F-23942-51C 249.95
92-93 XLT, RH, w/PW, mocha..... F-23942-51D 249.95
92-93 XL, w/PW, RH, scarlet F-23942-52B 249.95
92-93 XL, w/PW, RH, blue F-23942-52C 249.95
92-93 XL, w/PW, RH, granite..... F-23942-52E 249.95

DOOR PANEL ACCESSORY



20104 MAP POCKET, Door Panel

80-91 Black, pair, paintable F-20104-1A 73.50
87-91 Graphite, pair, paintable F-20104-1AE 101.95
80-91 Shadow blue, pair, paintable .. F-20104-1B 101.95
80-91 Napa red, pair, paintable..... F-20104-1C 101.95
80-91 Saddle, pair, paintable F-20104-1D 101.95



Map pockets listed below are original Ford manufacture. We have only limited quanities of each part number. Once they're gone, they're gone.

92-96 Scarlet, original, RH F-20104-10B 129.95
92-96 Charcoal, original, RH F-20104-10C 129.95



20123 WATERSHIELD KIT, Door Panel

Use 3M 8509 Bedding and glazing compound to attach to door. See adhesives section.

68-77 Heavy waxed paper behind door panel, pair F-20123-1A 9.10

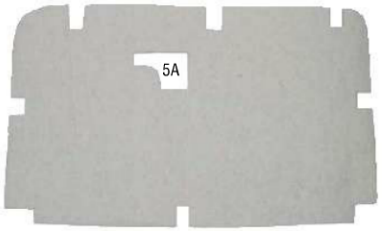

20124 INSULATION, Door Panel

78-79 ..... F-20124-5A 19.95
80-86 ..... F-20124-6A 19.95

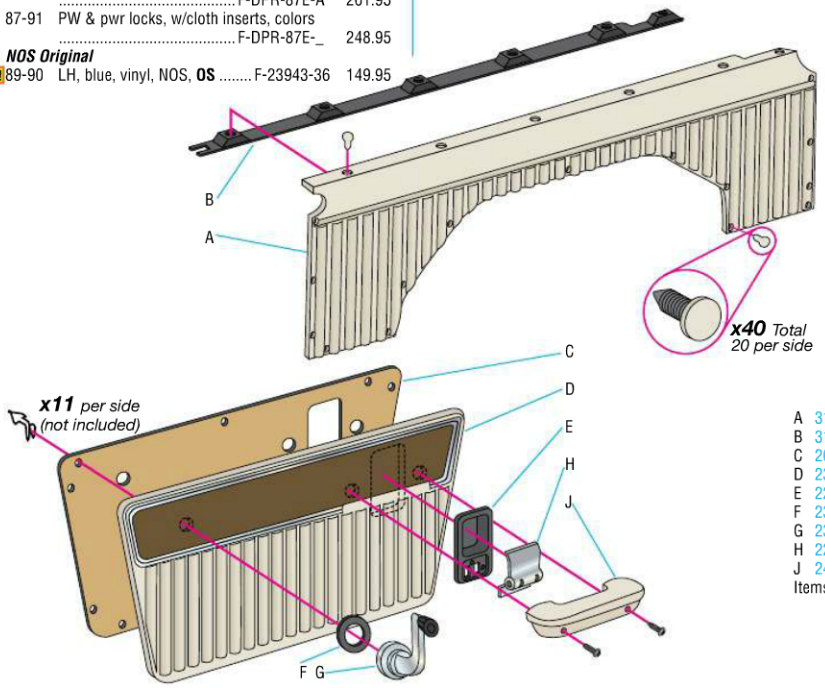

A 31012 Trim panel, quarter trim
B 312A40 Bracket, quarter trim panel
C 20123 Watershield, door panel
D 23942 Door panel
E 22634 Cup, arm rest
F 23370 Plate, window handle
G 23342 Handle, window crank
H 22600 Handle, door release
J 24100 Pad, arm rest
Items in blue -check listings for applications

ARM REST, DOOR

24100/01/40/41 ARM REST, Door



68-77	RH, black, repro	F-24140-8A	33.25
68-77	LH, black, repro	F-24141-8A	33.25
68-77	RH, white, repro, dyeable	F-24140-8E	34.95
68-77	LH, white, repro, dyeable	F-24141-8E	34.95
68-77	Red, pair, repro	F-24140-8BP*	76.95



68-77	Blue, pair, repro	F-24140-8CP*	81.95
68-77	Presidio gray, pair, repro	F-24140-8F	81.95



78-79	RH, black, original Ford tooling	F-24140-3	39.95
78-79	RH, black, repro	F-24140-3A	28.95
78-79	LH, black, original Ford tooling	F-24141-3	39.95
78-79	LH, black, repro	F-24141-3A	28.95
78-79	RH, red, original Ford tooling	F-24140-3C	39.95
78-79	LH, red, original Ford tooling	F-24141-3C	39.95
78-79	RH, blue original Ford tooling	F-24140-3B	39.95
78-79	LH, blue original Ford tooling	F-24141-3B	39.95

Original design modified slightly to work on both sides.

Replacement style fits OE stye or plastic repro panels, inc's metal cups, pair:



78-79	Black, replacement style	F-24140-74A	64.95
78-79	Shadow blue, replacement style	F-24140-74B	81.95
78-79	Portola red, replacement style	F-24140-74C	81.95
78-79	Buckskin, replacement style	F-24140-74D	81.95
78-79	Presidio gray, replacement style	F-24140-74E	81.95



80-86	Black, pair, repro	F-24140-4A	56.95
80-86	Shadow blue, pair, repro	F-24140-4B	73.50
80-86	Napa red, pair, repro	F-24140-4C	73.50
80-86	Saddle, pair, repro	F-24140-4D	73.50

Original:

81-82	RH, nutmeg	F-24100-3	39.95
81-82	LH, nutmeg	F-24101-3	39.95
83-85	LH, tan	F-24101-6	122.17
84-85	LH, charcoal	F-24101-8	138.42
86	RH, chestnut	F-24100-10	130.15
86	LH, chestnut	F-24101-10	138.42



87-89	RH, chestnut	F-24100-12	100.00
87-89	LH, chestnut	F-24101-12	62.85
88-90	RH, scarlet	F-24100-14	80.95
88-90	LH, scarlet	F-24101-14	90.00
89-90	RH, blue	F-24100-15	115.00
89-90	LH, blue	F-24101-15	50.87
89-90	RH, granite	F-24100-16	69.98
89-90	LH, granite	F-24101-16	46.25



Reproduction armrest fits OE or repro panels, incl metal cups, pair.

87-91	Black	F-24140-9A	56.95
87-91	Graphite	F-24140-9AE	73.50
87-91	Shadow blue	F-24140-9B	73.50
87-91	Napa red	F-24140-9C	73.50
87-91	Buckskin	F-24140-9D	73.50

24146 CLIP, Arm Rest Mounting

66-79	Clips to door	24146-2	0.55

DOOR PANEL TRIM



14028/14529 SWITCH, Power Door Lock

81-86	W/power door locks	F-14529-3	20.88
87-91	(b4 12/90)	F-14028-1	27.58
91-96	(from 12/90), RH	F-14028-2	28.80
91-96	(from 12/90), LH	F-14028-3	25.00



14527 HOUSING, Power Window or Lock Multi-switch

81-86	(from 11/80), LH, 2 switch, chrome	F-14527-1	96.25
81-86	(from 11/80), RH, chrome	F-14528-1	45.00



14529 SWITCH ASSY., Power Window

Switches are original unless noted otherwise.

Front door windows:

81-86	LH	F-14529-2	19.48
81-86	RH	F-14529-1	11.00
87-91	Fits either side	F-14529-8	22.45
87-91	Front window, single, RH or LH, repl't	F-14529-8A	17.95
92-96	Door, excl 94-96 Crew cab LH front	F-14529-11	14.08
92-96	Front window, single, RH or LH, repl't	F-14529-11A	13.95



Rear tail gate window-dash mounted switch:

78-79	Toggle type on dash	F-14529-5	25.42
80-86	Toggle type on dash	F-14529-5	25.42
87-91	Rocker type on dash	F-14529-9	24.72
92-96	On dash	F-14529-12	34.35



Rear tail gate window-tailgate mounted switch:

83-87	Key operated window	F-14529-6	261.82



14559 CLIP, Power Window Switch Retaining

78-96	Each	F-14559-1	14.95



21850 KNOB, Door Lock

	66-67	Each, repro	21850-2	4.75
NEW!	66-67	Repro, satin chrome, pair, custom, great match to satin chrome door and window handle kits	21850-2SC	4.95
	68-77	Round head, chrome, replacement, each	21850-3	4.95
	78-81	(b4 3/81), black, octagonal head, each	F-21850-1	3.95
	78-81	(b4 3/81), chrome, octagonal head, each	F-21850-2	4.95
	81-86	(from 3/81), chrome, each	F-431A36-1	9.08
	87-96	Each	F-21850-3	7.05
NEW!	87-96	Black, repro	F-21850-3A	7.50



21999 GROMMET, Door Lock Knob

87-91	Bright, each	21999-3	3.53
87-96	Black, each	F-21999-3	30.13



22600/1 HANDLE, Inside Door Release

66	Original, each	F-22600-4	139.03
66	Repro, each	F-22600-4A	19.95
67	Replacement, each	F-22600-5	14.95
67	Good repro, each	F-22600-5A	18.95
68-77	RH, exact repro, US made	F-22600-6	34.75
68-77	LH, replacement	F-22601-6	34.75
68-77	Repro style, fits either side, each	F-22600-6A	9.95
68-77	RH, best repro	F-22600-6B	14.95
68-77	LH, best repro	F-22601-6B	14.95
78-79	RH, original	F-22600-7	9.95
78-79	RH, repro	F-22600-7A	19.95
78-79	LH, exact repro, US made	F-22601-7	9.95
78-79	LH, repro	F-22601-7A	19.95
80-86	RH, original	F-22600-8	75.62
80-86	RH, repro	F-22600-8A	5.95
80-86	LH, original	F-22601-8	72.55
80-86	LH, repro	F-22601-8A	5.95
97-96	RH, black	F-22600-9	12.20
87-96	RH, black, repro	F-22600-9A	4.95
87-96	LH, black	F-22601-9	13.55
87-96	LH, black, repro	F-22601-9A	4.95



226A06BOOT, Inside Door Handle Rubber

87	On door panel	F-226A06-1	14.95



22624 SPRING, Door Window Handle

78-80	Pair	22624-1K	1.00

22634 CUP, Arm Rest

Behind armrest on door panel, 2 reqd

68-77	Black, original Ford tooling	F-22634-1	9.95
68-77	Black, repro, pair	F-22634-1A	8.95
68-77	Blue, original Ford tooling, ea	F-22634-1B	9.95
68-77	Red, original Ford tooling, ea	F-22634-1C	9.95
68-77	White, pair	F-22634-1E	19.95
69-77	Dk parchment, original Ford tooling, each	F-22634-1J	9.95



23342 HANDLE, Window Regulator

66	Black knob, correct style, each	F-23342-4	24.95
67	Each, original Ford tooling	F-23342-5A	27.95
67	Each, repro	F-23342-5	14.95
68-77	Original, each	23342-3	19.95
68-77	Repro, each	23342-3A	12.95
78-79	Original, each	F-23342-9	40.57
78-79	Repro, black knob, each	F-23342-9A	8.95
80-86	Clear knob, original, each	F-23342-8	90.00
80-86	Clear knob, repro, each	23342-6	9.95
87-96	Black knob, 2-4 reqd, original, each	F-23342-11	15.00
87-96	Black knob, 2-4 reqd, repro, each	F-23342-11A	8.95



23345/52 KNOB, Window Regulator Handle

68-79	Black, repro	23352-2A	4.40
68-79	Black, replacement	F-23352-2A	2.50
68-77	Blue, repro	23352-2B	7.95
68-77	Red, repro	23352-2E	7.95
68-77	Maroon, repro	23352-2D	7.95
68-77	Off White, repro	23352-2W	7.95
68-77	Parchment, repro	23352-2U	7.95
68-77	Ginger, repro	23352-2F	7.95
68-77	Green, repro	23352-2R	7.95
80-86	Clear, repro	F-23352-9	25.95
80-86	Clear, replacement	F-23352-9A	2.50



23362 COVER, Window Handle Screw

68-77	Aluminum, repro	23362-1A	1.25

23370 PLATE, Window Handle

73-86	Nylon	23370-2	2.50
87-96	Black	F-23370-3	5.40



24142 PLATE, Arm Rest Fingertip

Reproduction in metal. Fits OE or repro panels, pair.

78-79	Front, pair	F-24142-1A	10.95

VISOR

04104/5 VISOR

All visors are reproductions except as noted otherwise.



66-77	White, padded vinyl, each	F-04104-37E	49.95
67-77	Black, padded vinyl, pair	F-04104-37A	79.95
67-77	Parchment, padded vinyl, pair	F-04104-37J	79.95



78-79	Black, padded vinyl, each	F-04104-6	49.95
78-79	White, padded vinyl, each	F-04104-7	49.95



84-86	Vinyl, charcoal, original, each.	F-04104-17	49.95



87-89	Vinyl, chestnut, w/o mirror, original, each	F-04104-22	100.00
87-88	Vinyl, smoke, w/o mirror, original, each	F-04104-23	100.00



Corinthian grain vinyl, padded, pair.
Vinyl grain and colors are not exactly as original.

78-79	Black, repro	F-04104-8A	88.95
78-79	Off white, repro	F-04104-8W	88.95
78-79	Dk. blue, repro	F-04104-8C	88.95
78-79	Red, repro	F-04104-8B	88.95
78-79	Ginger, repro	F-04104-8G	88.95
78-79	Sand, repro	F-04104-8J	88.95
78-79	Chamois, repro	F-04104-8DD	88.95
78-79	Green, repro	F-04104-8R	88.95
78-79	Jade (turquoise), repro	F-04104-8K	88.95



Corinthian grain vinyl, padded, pair.
Vinyl grain and colors are not exactly as original.

80-83	Black, repro	F-04104-9A	88.95
80-86	Dk. blue, repro	F-04104-9C	88.95
80-86	Scarlet (red), repro	F-04104-9B	88.95
80-82	Fawn (sand), repro	F-04104-9J	88.95
80-86	Chamois, repro	F-04104-9DD	88.95
84-85	Charcoal, repro	F-04104-9E	88.95
86	Smoke (gray), repro	F-04104-9EE	88.95
80-82	Green, repro	F-04104-9R	88.95



04110 ROD SET, Sun Visor

66-77 Zinc plated, (4) F-04110-1A 24.95
66-77 Chrome plated, (4) F-04110-1B 34.95



04114 PIN, Visor Anchor

78-79 Paint to match, 2 reqd, original 04114-2 16.49
78-79 Paint to match, 2 reqd, repro, exact 04114-2A 2.95
78-79 Polished stainless steel w/cap, 2 reqd F-04114-2A 6.95

04115 CAP, Visor Pin

66-79 Rubber, pair 04115-1K 1.50



04132 CLIP, Visor Pin

See also 13776. Sold each.

78-79 Black, paint to match, original Ford tooling F-04132-2 9.95
78-79 White, paint to match, original Ford tooling F-04132-2E 9.95
87 W/cloth headliner F-04132-3 10.00
90-96 Paint to match F-04132-6 4.60



04144/5 ARM and BRACKET ASSY., Visor

78-79 W/o illuminating mirror, paint to match, each F-04144-4 24.95
78-79 W/o illuminating mirror, chrome, each F-04144-4A 39.95

TF =Truck Freight, OS =UPS Oversize.
See shipping information on inside back cover.

PILLAR/ROOF/WINDSHIELD TRIM



GAUGE HOLDER, A-Pillar

Add an aftermarket gauge where it can be seen! Fits standard 2 1/16" gauges, no drilling reqd. Adheres with high strength 2 sided 3M brand tape. Can be painted.

87-96 Dual F-03597-1B 43.50

Complete A-pillar, replaces factory pillar trim with new black unit with molded in gauge pods, fits 2 1/16" gauges. Paintable

87-96 Dual gauge holder F-03597-2C 88.95
87-96 Triple gauge holder F-03597-2D 92.95

Gauges are not included.

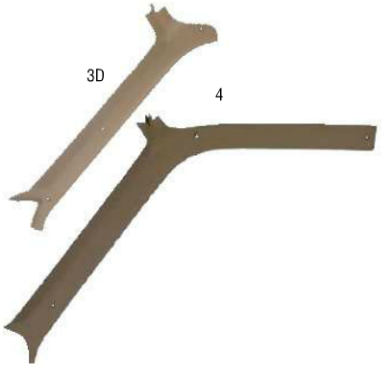

03598/9 MOLDING, Windshield Garnish Side

80-86 W/o headliner, RH, tan F-03598-3D 59.95
80-86 W/o headliner, LH, tan F-03599-3D 59.95
87-91 RH, paint to match F-03598-4 19.95
87-91 LH, paint to match F-03599-4 19.95



03606 MOLDING, Windshield Garnish

87-91 Upper, paint to match F-03606-4 59.95



03818 KNOB SET, Windshield

66-68 Chrome F-03818-1B 49.95



17C569 TRIM COVER, W/Shield Wiper Motor

W/electric motor, covers motor and arms across inside upper windshield frame, also fits 66-68 with factory electric wiper conversion.

69-77 Black F-17C569-1 56.95
69-77 Parchment F-17C569-1D 84.95



29024 HOOK, Roof Coat

73-83 (b4 12/82), black, excl 80 b4 ser#GG0,001, original Ford tooling 29024-1A 2.95
83-92 (from 12/83), black F-29024-3 8.31



29232 BASE, Coat Hook

Nylon base, 29024 colored vinyl hook slides over this part.

68-83 Original 29232-1 6.00
68-83 Repro 29232-1A 2.50



51968 HEADLINER, Interior Roof

All headliners must be shipped by truck freight unless noted otherwise.

66-68 W/vacuum wipers, front and rear sections, w/ screws F-51716-2A 99.95
66-77 Front and rear sections, w/electric wipers (66-68's w/factory electric conversion), inc's screws F-51716-1A 79.95

REAR CAB

51942 TRIM PANEL, Rear Roof

92-96 Granite, original, limited NOS stock availability, **TF** F-51942-1E 149.95

QUARTER TRIM



31012 TRIM PANEL, Rear Quarter

68-76 Black, molded plastic repro, **OS** F-31012-1A 129.95
68-76 Parchment, molded plastic repro, **OS** F-31012-1D 199.95

312A40 MOUNTING BRACKETS, Rear Quarter Trim

68-77 Fits F-31012-1's above, pair ... F-312A40-1 56.95

FLOOR



013100 RETAINER, Carpet Center
78-82 At shift hole, round F-013100-1 56.95

013208/9 STEP PLATE, Door Scuff



78-79 OE tooling, pair F-013208-3 119.95



87-96 Black, 2 reqd F-013208-6 20.33





66-77 Custom billet aluminum w/Bronco logo F-013208-10B 119.95

32A



013086 FLOOR COVER, Rubber
When carpet just won't do. Molded black vinyl (rubber), complete sets inc. front, rear cargo area mats and wheel well covers; rear cargo area includes wheel well covers. See also carpets on following pages.

66-76 Complete set, w/single fuel tank, **OS** F-013086-30A 289.95
66-76 Complete set, w/dual fuel tank, **OS** F-013086-30B 254.95
NEW! 77 Complete set, **OS** F-013086-30C 289.95
66-77 Front only, **OS** F-013086-30 159.95
66-76 Rear cargo area & wheel well, single tank, **OS** F-013108-30A 157.50
66-76 Rear cargo area & wheel well, dual tanks, **OS** F-013108-30B 157.50
77 Rear cargo area & wheel well, **OS** F-013108-30C 157.50
78-79 Complete set, **OS** F-013086-31A 281.95
78-79 Front only, **OS** F-013086-31 191.95
78-79 Rear cargo area & wheel well, **OS** F-013108-31 157.50
80-96 Complete set, **OS** F-013086-32A 357.95
80-96 Front only, **OS** F-013086-32 202.95
80-96 Rear cargo area & wheel well, **OS** F-013108-32 218.95



42624 SCUFF PLATE, Tailgate Carpet
78-91 Anodized aluminum, 2 3/8" wide, 61 1/8" long F-42624-1 39.95

43732 RETAINER, Tailgate Weatherstrip
78-96 Lower, black steel, 7/8" w x 61 3/16" l, limited availability of NOS original stock... F-43732-2 39.95

Bronco Carpet

To order carpet use the information below to create a part number for the specific type you require. Therefore in the example "F-CA514-001" the carpet is for a Ford Bronco, 1966-73, 4x4 single fuel tank in #001 black. Cargo area is included with Bronco full sets. Raylon loop used on Bronco to 1973 and nylon plush cut pile is used from 1974 on. If you wish to put cut pile in your 1966-73 Bronco use the 74 model year code and color code. All carpets are molded to the floor pan. F-CA534-815 shown.



F-CA514-001
BODY CODE / COLOR CODE / MODEL YEAR CODE

CARPET COLOR CODES Due to many shades used, send sample cut from under seat or other protected area.

	BRONCO 66-73	74-77	78-79	80-86	87-96
Black	*001*	*801*	*801*	*801*	-
Medium Blue	*009*	-	*7766*	-	-
Light Blue	-	-	-	*802*	-
Dark Navy Blue	-	*819*	-	*819*	-
Regatta Blue	-	-	-	-	*9304*
Dark Blue	*007*	-	-	-	*7130*
Ford Blue (Crystal blue)	*006*	*7879*	*7879*	-	*(8082)*
Medium Green (dark)	*(008)*	*869*	-	-	-
Moss Green	*014*	-	-	-	-
Sage Green	-	-	-	*4840*	-
Light Jade (77 only)	-	*859*	-	-	-
Jade Green	-	-	*849*	-	-
Red Flame	*002*	-	-	-	-
Red	-	*815*	*815*	-	-
Oxblood	-	*875*	*4305*	-	-
Maroon	*013*	*825*	-	-	*825*
Dark Maroon	-	-	-	*7298*	*7298*
Dk Brown	*010*	-	-	-	-
Taupe or Chestnut	-	-	-	*821*	*821*
Lt Saddle (Mocha)	*011*	-	-	-	*(9197)*
Saddle	-	*4640*	-	*820*	-
Dark Saddle	*012*	-	-	-	-
Sandalwood	-	*871*	-	-	-
Tan (Med Saddle 77)	-	*(7140)*	-	*8384*	*8384*
Fawn	*019*	-	-	-	-
Gold	-	-	*7577*	-	-
Lt Opal Gray	-	-	-	-	*9196*
Smoke Gray	-	-	*807*	*807*	*807*
Charcoal Gray	-	*897*	-	-	-
Graphite Gray	-	-	-	*7701*	*7701*
Graphite Gray 85-86	-	-	-	*7766*	-

Body Code

Bronco	
66-76 Wagon	*5*
66-77 Pickup (front only)	*6*
77 Wagon	*7*
78-96 All	*5*

Model Year Code

Bronco	
66-73 sngl fuel tank	*1*
66-73 dual fuel tanks	*5*
74-76 sngl fuel tank	*2*
74-76 dual fuel tanks	*6*
77	*7*
78-79	*3*
80-96	*4*

See pricing box below for door panel carpet & Bronco tailgate carpet. Add carpet color code to base part number shown.

PART NUMBER WORKSPACE

Fill in codes for the carpet you need to create a part number to use when ordering.

F-CA ☐☐4 - ☐☐☐☐
Body code / Model year code / Color code

Carpet pricing

66-76	**Bronco**	**Full set**	**$274.95**
77	**Bronco**	**Full set**	**$303.95**
66-73	**Bronco**	**Front only**	**$159.95**
74-77	**Bronco**	**Front only**	**$148.50**
78-96	**Bronco**	**Full set**	**$370.95**
66-73	**Bronco tailgate, raylon**	**F-CATG1-____**	**$84.50**
74-77	**Bronco tailgate, nylon**	**F-CATG2-____**	**$84.50**
78-79	**Bronco door panel**	**F-CADP1-____**	**$41.50**

Note: to ensure a color match you may send in a sample of your carpet from under the seat or another area where the carpet hasn't faded or worn and note in place of the color code "match to sample" We will use that sample to find the closest match possible.

Custom "Bronco" logo Carpeted Floor Mats

To order floor mats use the information below to create a part number for the specific type you require. Therefore in the example "F-CM511-001" the carpet is for a 1966-73 in #001 black. 80/20 Nylon/rayon loop used on Bronco to 1973 and 100% nylon plush cut pile is used from 1974 on. If you wish to put cut pile in your 1966-73 Bronco use the 74 model year code and color code. All floor mats are sold in sets of 4. Both front mats have the "Bronco" logo.

Model Year Code Bronco	
66-73	1
74-77	2
78-86	3
87-96	4

F-CM511-001

MODEL YEAR CODE — COLOR CODE

CARPET COLOR CODES **Due to many shades used, send sample cut from under seat or other protected area.**

	BRONCO				
	66-73	74-77	78-79	80-86	87-96
Black	001	801	801	801	-
Medium Blue	009	-	7766	-	-
Light Blue	-	-	-	802	-
Dark Navy Blue	-	819	-	819	-
Regatta Blue	-	-	-	-	9304
Dark Blue	007	-	-	-	7130
Ford Blue (Crystal blue)	006	7879	7879	-	(8082)
Medium Green	-	869	-	-	-
Moss Green	014	-	-	-	-
Sage Green	-	-	-	4840	-
Light Jade (77 only)	-	859	-	-	-
Jade Green	-	-	849	-	-
Red Flame	002	-	-	-	-
Red	-	815	815	-	-
Oxblood	-	875	4305	-	-
Maroon	013	825	-	-	825
Dark Maroon	-	-	-	7298	7298
Dk Brown	010	-	-	-	-
Taupe or Chestnut	-	-	-	821	821
Lt Saddle (Mocha)	011	-	-	-	(9197)
Saddle	-	4640	-	820	-
Dark Saddle	012	-	-	-	-
Sandalwood	-	875	-	-	-
Tan (Med saddle 77)	-	(7140)	-	8384	8384
Fawn	019	-	-	-	-
Gold	-	-	7577	-	-
Lt Opal Gray	-	-	-	-	9196
Smoke Gray	-	-	807	807	807
Charcoal Gray	-	897	-	-	-
Dk Graphite Gray	-	-	-	7701	7701
Graphite Gray 85-86	-	-	-	7766	-

All logo's have gold thread except on certain shades of tan, light gray & jade carpets where black thread is used, dark gray mats have silver thread.



66-73 002 Red flame



74-77 869 Med green



78-86 820 Saddle



87-96 7130 Dark blue

PART NUMBER WORKSPACE

Fill in codes for the mats you need to create a part number to use when ordering.

F-CM 5 ☐ 1 - ☐☐☐☐

Model year code — Color code

Note: to ensure a color match you may send in a sample of your carpet from under the seat or another area where the carpet hasn't faded or worn and note in place of the color code "match to sample" We will use that sample to find the closest match possible.

Carpet floor mat pricing		
66-96	"Bronco" logo mats	$102.95

CONSOLE



06064 CATCH, Console Door

82-91 Super cab F-06064-1 34.22

FLOOR/WALL INSULATION

1980-86 Sound insulation over deadener





1980-86 Floor sound deadener lays in first under the insulation layer.

ACOUSTI-SHIELD KIT, Sound and Temperature Insulation

Engineered using materials currently in use by the Big 3 automakers, these kits utilize the latest in lightweight but highly efficient materials to quiet and insulate your truck from excessive noise and heat. Custom fit for the years listed to maximize performance and make installation easy. Doors are deadeners only no insulation.

66-77 Full cab, floor, wheel wells, doors and roof F-011180-12AK 466.00

66-77 Half cab, floor, doors and roof F-011180-12BK 393.00

TF =Truck Freight, OS =UPS Oversize.
See shipping information on inside back cover.

ACCESSORY FLOOR MAT

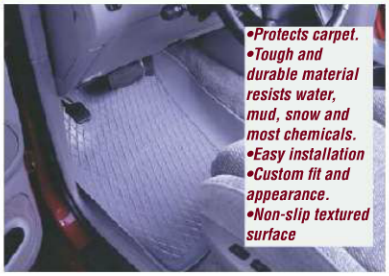

- *Protects carpet.*
- *Tough and durable material resists water, mud, snow and most chemicals.*
- *Easy installation*
- *Custom fit and appearance.*
- *Non-slip textured surface*

HUSKY LINER™, Floor Mat

Available in 3 colors: black (A), gray (C), mocha (D), add color code in parenthesis to end of part number for ordering.

•FRONT FLOOR SIDES

80-96 Pair, **OS** ..... F-013086-10_ 77.95

•FRONT FLOOR CENTER

80-91 4x2 ..... F-013088-10_ 46.95

92-96 W/push button 4wd ..... F-013088-10_ 46.95

•REAR FLOOR

92-96 **OS** ..... F-013087-15_ 77.95



CATCH-ALL, Front Floor Mat

Molded to fit, color matched to OE, protects carpet and Scotchgarded™ for stain resistance. Fits snug and stays in place with a patented underside gripper. Easy to clean-simply hose off! Available in 3 colors: blue (B), mocha (D), gray (E), add color code in parenthesis to end of part number for ordering. Ex. F-013086-24B

80-96 Excl 88-96 4x4 w/floor shift, pair, **OS** ..... F-013086-24_114.95

88-96 4x4 w/floor shift, pair, **OS** ..... F-013086-25_114.95

CARGO AREA ACCESSORY



HUSKY LINER®, Cargo Area

Protects your carpet from dirt, grime and spills. Custom molded to fit the contours of the cargo area. Available in 3 colors: black (A), gray (C), mocha (D), add color code in parenthesis to end of part number for ordering. Example F-011600-2C.

80-91 Black only, **OS** F-011600-1A 88.95

92-96 **OS** ..... F-011600-2_ 88.95



PET DIVIDER

Keeps pets from front area of vehicle. Installs quickly and has adjustable sides and height. No tools reqd. Low-glare black coating.

78-96 **OS** F-45440-1A 52.40

Extensions for larger SUV's

..... F-45440-1E 25.65



PLUG And CHUG DRINK HOLDER, Ashtray

Simply remove ash tray and side into the ash tray tracks! Holds two standard size drinks

78-79 Black F-045A36-10A 40.50

78-79 Dk blue F-045A36-10B 40.50

78-79 Dk red F-045A36-10C 40.50

78-79 Medium gray F-045A36-10E 40.50

Single king size drink holder

78-79 Black F-045A36-10A1 40.50

78-79 Dk blue F-045A36-10B1 40.50

78-79 Dk red F-045A36-10C1 40.50

78-79 Medium gray F-045A36-10E1 40.50

*Deterence is the key and thieves know that to defeat a steering wheel lock just hacksaw the steering wheel and the lock will fall free, leaving your vehicle completely operable and vulnerable. And if you do recover it, your expensive or rare steering wheel is trashed! This product is unique in that it **locks the brake pedal**, rendering it inoperable. A thief is not going to steal a vehicle he can't stop! Try taking that same hacksaw to this lock. There just isn't enough room to twist yourself under the dash and get the saw enough room and leverage to cut the hardened steel lockrod. A thief just isn't willing to invest that kind of time and he will likely try for easier pray. Adapts easily to most vehicles. Includes two keys for the unique lock. Works equally well on clutch pedals.*

..... 973-2 29.95

Low Priced Theft Insurance.



BRAKE LOCK!

Order toll-free 24-hours a day 7-days a week!

Walk-up counters
open 7-days!
Mon-Fri
8am-9pm
Sat & Sun
8am-5pm



TRUCK COVERS



EVOLUTION 4 CAR COVER FABRIC



Evolution® 4

EVOLUTION® 4 is a breakthrough fabric from Kimberly-Clark with some very unique properties. It's 4 layers offer 3 types of protection:

- ***Outer layer stands up to everything from Ultra-Violet radiation & battery acid to bird droppings.***
- **Middle 2 layers provide a fluid and moisture barrier that *allows air to circulate through to the car.***
- **Inner layer is soft enough to pamper the most delicate *finishes and waxes.***

Custom Fit. Whatever year Truck you own, we sell an EVOLUTION® 4 cover made specifically for that model—made to fit snug and look perfect, right down to the mirror pockets.

Non-Stretching, Non-Shrinking. You buy a custom-fit cover for an exact fit- why accept less when you don't have to?

Breathable. Both moisture and trapped heat can escape through this fabric. Important for classics because non-breathable covers can cause paint and interior damage.

Quick Drying. Moisture is never actually absorbed by the *EVOLUTION® 4 fabric.*

Non-Mildewing. Even if you fold this cover up wet and *store it away, EVOLUTION® 4 will not rot or mildew! Complete UV protection-material and threads*

All-Temperatures. From sizzling summers to below-zero winters EVOLUTION® 4 fabric stays soft and pliable to do it's job.

NEW!	66-77	W/o spare	F-941-32A	254.95
NEW!	66-77	W/ external spare	F-941-32B	254.95
	78-96		F-941-31	224.95

COVERCRAFT

COVERBOND 4



Mirror pockets, included on *some models.*



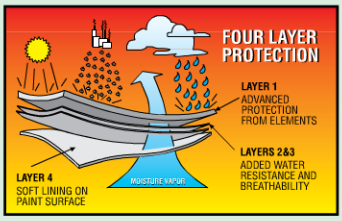

Mosom/Coverbond 4

Mosom/Coverbond4™ vehicle covers provide four layers of vehicle protection from rain, snow, bird and tree droppings, industrial fall-out, dirt, dust, and the damage caused by the heat and ultraviolet rays of the sun. In combination with a budget conscious price, Mosom/Coverbond4™ is the automotive enthusiasts best friend.

Mosom/Coverbond4™ vehicle covers are made up of four fabric layers that act as a microscopic two-way filter - providing a barrier between the vehicle and the elements, yet allowing excellent breath-ability. The first layer is comprised of a Spun-Bond Polymer that gives the cover a durable surface, and advanced protection from the elements. The middle two layers of are comprised of Melt-Blown Polymer, and provide more specific protection from water, dirt, and dust, and pollutants. The fourth layer, which actually rests on the vehicle's finish, consists of a Spun-Bond Polymer, and affords the cover a soft, non-abrasive lining. All layers are impregnated with UV inhibitors for maximum resistance to cover break-down caused by the sun. These layers are specially joined together so that any trapped heat or moisture under the cover can "breathe out" through the surface of Coverbond4™ - preventing paint and interior damage, and providing the cover with quick-drying and non-mildewing properties.

Mosom/Coverbond4™ covers provide excellent fit to protect the finish, by utilizing a pain-staking CAD/CAM manufacturing process. Mosom/Coverbond4™ vehicle covers are particularly tailored to follow vehicle lines and contours, include mirror pockets, and use elastic front and rear hems for tight draw-down. Cover durability is ensured by employing double-stitched, overlapped seams.

66-77	Wagon w/o spare	F-946-32A	111.95
66-77	Wagon w/spare	F-946-32B	111.95
78-91	W/o spare	F-946-31A	111.95
78-91	W/spare	F-946-31B	111.95
92-96	W/o spare, standard mirror	F-946-31C	111.95
92-96	W/o spare, trailer mirror	F-946-31CT	111.95
92-96	W/spare, standard mirror	F-946-31D	111.95
92-96	W/spare, trailer mirror	F-946-31DT	111.95



GROMMET, Antenna

Snap together grommet prevents truck covers from tearing at the antenna hole.

945-3A 2.50





Protect it!

All of our covers feature pre-installed scratch-proof grommets which will accept the installation of our CoverLock. We recommend the purchase of one of these locks, since it can complicate a crooks life just long enough to save your valuable car cover. The kit includes a 7 foot plastic coated steel cable which runs under the truck and through the grommets (twice), brass lock and two keys. Two may be reqd on some trucks

945-1A 9.95





Durafin



Since we began offering this cover, it's become a favorite among our customers.

The extra-heavy Canton Flannel exterior looks & acts tough, but it's 100% tufted cotton interior sees that your paint suffers none of the "hairline" effects left by many other covers. The outer skin is treated with a protectorant called Durafin® to create a dust-resistant yet breathable home for your classic.

Thickness equals protection from cat claws, bike handles and other hazards a garage-stored truck might encounter. Heavy gauge elastic trim draws the bottom of the cover tightly around the bottom of the tires for total coverage. Lock grommets installed.

Due to it's weight (25+lbs.), the Durafin® *is not recommended for on-off everyday use. It is also not recommended for continuous outdoor use.*

66-77	Not a custom fit, but VERY close!	F-940-32	249.95
78-96		F-940-31	294.95



Bag It!

Don't remove your cover then toss the car cover on the ground or in your bed where it can pick up dust and grit, and later put the cover back on the truck!! Please, to protect your finish, put the cover in a bag-preferably one that* closes easily. Our bag fits all covers listed here. Made of *dust and water resistant "Weather-Lite" material.

945-2A 9.95

WHEEL/WHEEL COVER



1012 NUT, Wheel Stud

89-91 W/aluminum wheel F-1012-2 2.20
66-96 Zinc, open, 1/2"-20, excl 89-91 w/aluminum wheel 1012-1 0.48

1107 STUD, WHEEL

See brake charts for complete listings.

1130 CAP, Wheel Hub

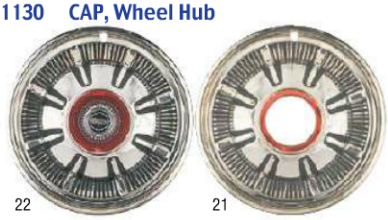

67-77 Front, open, original Ford tooling F-1130-21 84.95
67-77 Rear, black center emblem, original Ford tooling F-1130-22 84.95



77-90 Part time 4x4 front, 10 13/16" dia., 5 spokes w/ black center ring F-1130-11 58.95
77-90 Rear, 10 13/16" dia., 5 spokes, black center ring F-1130-5 58.95

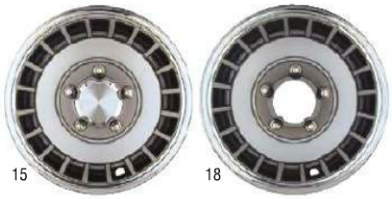

87-90 Rear, 16 1/4" dia., "turbine" mag F-1130-15 243.95
87-90 Front, 16 1/4" dia., "turbine" mag F-1130-18 200.00



77-89 7 1/8" dia., used with styled steel wheel F-1130-6 69.95



80-94 Rear, 7 1/8" dia., chrome w/red center F-1130-13 105.30
95-96 Rear, 7 1/8" dia., chrome F-1130-24 110.87
80-90 Front, 7 1/8" dia., chrome center for styled steel wheel F-1130-16 150.00



79-89 Part time 4x4 rear only, full time 4x4 front or rear, 16 1/4" dia., "turbine" mag .... F-1130-10 CALL

1141 INSERT, Hub Cap Center

67-77 Front, original Ford tooling F-1141-21 39.95
67-77 Rear, original Ford tooling F-1141-22 39.95



1705 TIRE VALVE KIT

66-77 Set of 5, 1 1/4" long, original Dill, US made, fits .453" rim hole, incl correct Dill 627 cap, black 1705-1K 9.95

1720 CAP SET, Tire Valve

66-77 Dill 627, (5), black plastic, concours correct with original "nib" 1720-1K 3.95

SPARE TIRE/JACK



1424 PLATE, Spare Wheel Mounting

66-77 W/swing away spare, zinc F-1424-7A 8.75
66-77 W/swing away spare, stainless steel F-1424-7B 11.95
78-96 W/o swing away carrier F-1424-2 4.71



1462 NUT, Spare Wheel Mounting

66-77 W/o swing away carrier, "wing nut" 3/8"-16 ..... 1462-1 3.95
66-77 W/swing away spare, zinc F-1462-7A 13.95
66-77 W/swing away spare, stainless steel F-1462-7B 18.95



17032 WRENCH, Jack Handle and Wheel Nut

78-87 13/16" hex T-17032-1 13.95



17035 WRENCH, Wheel Nut

88-96 ..... F-17035-2 19.27

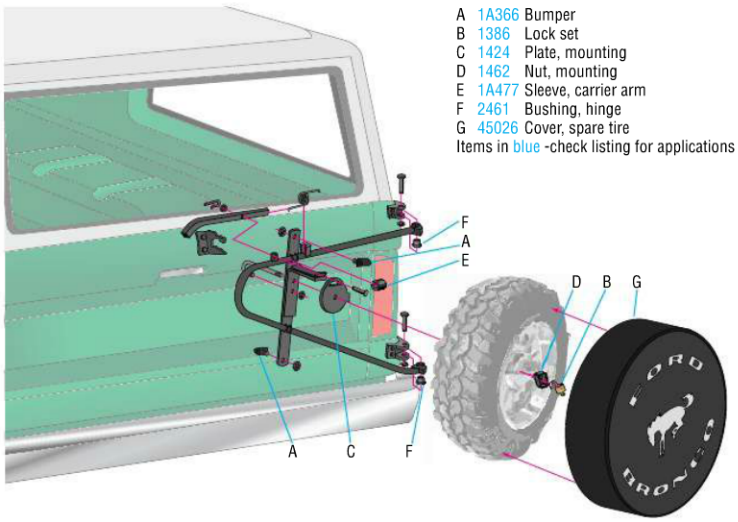

A 1A366 Bumper
B 1386 Lock set
C 1424 Plate, mounting
D 1462 Nut, mounting
E 1A477 Sleeve, carrier arm
F 2461 Bushing, hinge
G 45026 Cover, spare tire
Items in blue -check listing for applications



17081 HANDLE, Jack
90-96 Rod F-17081-4 65.07



17091 STRAP, JACK RETAINING
66-77 Black, exact repro, includes stainless steel anchor F-17091-1A 12.95
66-77 Stainless steel, exact repro, includes anchor F-17091-1B 18.95



1A366 BUMPER, Spare Wheel Carrier
78-96 W/swing away carrier, repro... F-1A366-2 10.00
78-96 W/swing away carrier, original, limited NOS stock availability F-1A366-2A 10.00



1A477 SLEEVE, Spare Wheel Carrier Arm
78-96 W/swing away carrier..... F-1A477-3 CALL



2461 BUSHING, Carrier to Hinge
70-77 W/swing away carrier, 7/8" long F-2461-1 2.75



TIRE COVER



PLAIN
66-96 Black, 26.5-29" F-45026-10A 13.95
66-96 Black, 29.5-30" F-45026-11A 13.95



"4x4"
66-96 Black, 26.5-29" F-45026-16A 23.95

BRAKE SECTION INFORMATION

General Brake .....pg 24
Prebent Brake Lines..pg 25
Brake & Clutch Pedal.pg 25
Master Cylinder.....pg 26
Drum Brake .....pg 27
Disc Brake .....pg 28
Power Brake.....pg 30
Parking brake .....pg 30
Brake Quick Charts....pg 31

Some abbreviations found in this section (alphabetical-read across):

A/T Automatic transmission
ctrl..control (speed control)
excl.....excludes
GVW..Gross vehicle weight
incl ..... includes
LB ..... Long bed
MB..... manual brakes
mm.....millimeter
MV.....Hydro-boost
PB .....Power brakes
RA .....Rear axle
reqd ..... Required
RH.....passenger side
ser# ..... serial number
w/..... Used with
WB ..... Wheel base
chrg... charge (core charge)
dia. .....diameter
FA ..... Front axle
HD ..... Heavy duty
l .. litre (metric engine size)
LH..... drivers side
MC .....Master cylinder
M/T ... Manual transmission
OE.Original equipment style
pc (s) .....Piece (s)
Repl'mt .....Replacement
reqs.....Requires
SB.....Short bed
SPC ... Single piston caliper
W/o ..... Used without

 # pounds-when used following a number (8500#= 8500 pounds)
A complete listing of abbreviations may be found at the rear of this catalog

GENERAL BRAKE



PRESSURE GAUGE KIT, Brake
Used to read actual pressure at wheel cylinder or caliper to tune ft/rr brake bias with an adjustable proportioning valve or to sort out brake problems.
..... 951-1 49.95



GREASE FITTING CAPS, Black
Kit of 6 pcs. Fits over grease fittings and bleeder screws to prevent dirt from clogging the openings
..... 933-1K 1.25

Actual size-Use to scale yours



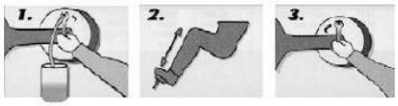

SPEED BLEEDER® by Russell Performance Products
One of the best ways to preserve your brake system is to bleed the brakes at least once a year. This will place fresh brake fluid in the caliper/wheel cylinders where heat breaks down the fluid. And it is such a pain in the rear to do, most of us just don't. Well, here is an invention that makes the process very easy! Replace your bleeder screws with the Speed Bleeders®, open the bleeder 1/4 turn, place a hose on the nipple and into a catch cup and pump the brake a few times. The internal check ball allows fluid to escape but prevents vacuum from sucking in air! Close the valve snugly, but not too tight, move to the next cylinder. And as always check your fluid level before and after bleeding each corner and always use fresh high quality brake fluid from a sealed container. Shown actual size above for comparison to your bleeders. Sold in pairs.
7/16" -20 x 1.25", 80-96 Ft Disc, most applications 932-51 11.95
1/4"-28 x .94" 932-54 12.95
3/8"-24 x 1" 932-59 12.95

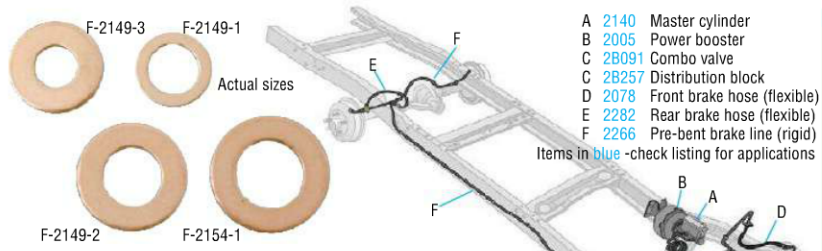

A 2140 Master cylinder
B 2005 Power booster
C 2B091 Combo valve
C 2B257 Distribution block
D 2078 Front brake hose (flexible)
E 2282 Rear brake hose (flexible)
F 2266 Pre-bent brake line (rigid)
Items in blue -check listing for applications

2149/2154 GASKET, Brake & Clutch Hoses

Sold each. Special copper washers to seal fluid pressure.

66-96	For 1/4" bolt	F-2149-3	0.55
66-96	For 5/16" bolt	F-2149-1	0.30
66-96	For 3/8" bolt	F-2149-2	0.45
66-96	For 7/16" bolt	F-2154-1	0.45



66-77	New Ford replacement unit, disc/drum	2B091-20AA	119.95
66-77	New, tuned for disc/drum	2B091-20BA	59.95
66-77	New. tuned for 4 wheel disc	2B091-20BB	68.30
66-77	Chrome, disc/drum	2B091-20CA	78.50
66-77	Chrome, disc/disc	2B091-20CB	69.95

These are not original truck units and will require bending new lines to fit.

A note about "Combo valves". These are required on disc brake vehicles. Factory disc brake vehicles already have some sort of "combo valve" whether it's a single unit or a separate proportioning valve and distribution block. Our valves are for drum to disc converted trucks.

2B092 MOUNTING BRACKET, Proportioning Valve

NEW!

65-73	Anodized, fits 2B091-20BA, BB, CA, CB	2B092-1A	28.95
65-73	Stainless steel, fits 2B091-20BA, BB, CA, CB	2B092-1B	35.95



2B091 VALVE, Brake Distribution & Proportioning

Combines the best of 2 separate parts into one easy solution. Combines the ease of a distribution block to route brake fluid correctly with an adjustable proportioning valve to adjust the rear brake pressure.

66-96	Black	C-4874-21A	131.95
66-96	Polished billet aluminum	C-4874-21P	151.95



VALVE, Disc Brake Proportioning

Mounts on front fender apron

65-73	Black, replacement, line modification reqd	2B091-1A	53.25
65-73	As above with pressure gauge and fittings for tuning purposes	2B091-1B	74.95
65-73	Polished billet, replacement, line modification reqd	2B091-1C	79.95
65-73	As above with pressure gauge and fittings for tuning purposes	2B091-1D	106.95



RESIDUAL PRESSURE VALVE

NEW!

Residual Pressure Valve

65-73	2#	2B091-7AU	15.95
65-73	With disc/disc and PB conversion, 10#, use at rear line	2B091-7BU	17.95



Brake Fluid

NEW!

Racing High Temp

Highest available dry boiling point of 570˚ to withstand the extreme temperatures generated by competition braking systems. Maintains chemical stability at these extreme temps. Reduced moisture affinity. DOT 3

12 oz. bottle		976-3	11.95



2B257 DIFFERENTIAL VALVE, Brake Pressure

76-79		F-2B257-5	254.68
84-86		F-2B257-8	292.78



2B264 SWITCH, Brake Pressure Differential Warning Lamp

67-79		2B264-1	33.64
80-96		2B264-3	33.56



PREBENT BRAKE LINES

2266 BRAKE LINE SET, Pre-Bent Rigid

Pre-bent lines of carbon or stainless steel. Duplicated against original lines using CNC Computer benders for accuracy and consistency. Manufactured to exceed all DOT, SAE, and ISO specifications. Lines and fittings are 45 degree standard automotive specs. Stainless tubes are made from 304 seamless nonmagnetic stainless steel and are pressure tested to 6000 psi burst.

66	Manual drum, Dana 30 FA, 8 pc, carbon	F-2266-61	144.95
	Stainless steel	F-2266-61S	169.95
68-71	Manual drum, Dana 30 FA, 10 pc, carbon	F-2266-62	144.95
	Stainless steel	F-2266-62S	169.95
71-75	Manual drum, Dana 44 FA, 10 pc, carbon	F-2266-63	144.95
	Stainless steel	F-2266-63S	169.95
76-77	Manual disc, Dana 44 FA, 8 pc, carbon	F-2266-64	149.95
	Stainless steel	F-2266-64S	174.95
76-77	Power disc, Dana 44 FA, 8 pc., carbon	F-2266-65	149.95
	Stainless steel	F-2266-65S	174.95
78-79	Power disc, 8 pc, carbon	F-2266-67	149.95
	Stainless steel	F-2266-67S	174.95
80-85	7 pc, carbon	F-2266-69	149.95
	Stainless steel	F-2266-69S	174.95
87	4wd, power disc, 7 pc, carbon	F-2266-83	154.95
	Stainless steel	F-2266-83S	179.95
93	4wd, power disc, 10 pc, carbon	F-2266-84	159.95
	Stainless steel	F-2266-84S	179.95

BRAKE AND CLUTCH PEDAL

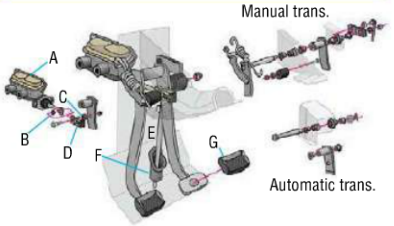

A 2140 Master cylinder
B 2A309 Bushing
C 2B129 Spacer
D 13480 Switch, brake light
E 7521 Rod, clutch
F 7A533 Seal, clutch rod
G 2457 Pad, brake & clutch pedal



2454/2457 PAD, Brake & Clutch Pedal

66-75	Parking brake	F-2454-3	3.50
66-75	Brake, A/T	F-2457-2	3.95
66-75	Brake, M/T	F-2457-2	3.95
66-75	Clutch	F-2457-2	3.95
76-79	Parking brake	F-2454-3	3.50
76-79	MB, A/T	F-2457-2	3.95
76-79	MB, M/T	F-2457-2	3.95
76-79	Clutch	F-2457-2	3.95
76-79	PB, A/T	F-2457-3	8.89
76-79	PB, M/T	F-2457-3	8.89
80-91	Parking brake	F-2454-3	3.50
80-91	Brake, AT	F-2457-3	8.89
80-91	Brake, MT	F-2457-2	3.95
80-91	Clutch	F-2457-2	3.95
92-96	Parking brake	F-2457-4	7.00
92-96	Brake, AT	F-2457-3	8.89
92-96	Brake, MT	F-2457-2	3.95
92-96	Clutch	F-2457-2	3.95
Optional pad-replaces F-2457-2, custom with "Bronco" script		F-2457-2B	9.95
Optional pad-replaces F-2457-3, custom with "Bronco" script		F-2457-2C	12.95



2471 BUSHING, Brake & Clutch Pedal

Unless noted otherwise 2 pcs. are required per pedal.

66-79	Brake or clutch	2471-1	0.99



2474/2A309 BUSHING, Brake & Clutch Master Cylinder

66	Brake	F-2A309-1	2.50
67-68	Brake	2474-2	1.20
69-75	Brake	2474-3	4.98
76-77	Brake	2474-2	1.20
78-79	Brake, w/A/T, speed control	2474-3	4.98

Required quantities vary with application, usually 2-4 are req'd.

2476 SEAL, Brake & Clutch Arm

66-68		F-2476-1	7.00

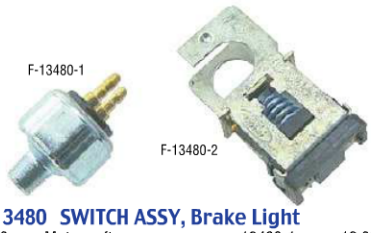

13480 SWITCH ASSY, Brake Light

66	Motorcraft	13480-1	12.60
66	Replacement	F-13480-1	4.95
67-77		F-13480-2	12.50
78	(b4 ser#CC0,001), w/o speed control, replacement	F-13480-5	6.95
78	(b4 ser#CC0,001), w/speed control, replacement	F-13480-4	15.75
78-79	(from 78 ser#CC0,001), w/speed control, replacement	F-13480-6	21.50
80-83	MB, replacement	F-13480-7A	20.25
80-85	PB, replacement	F-13480-7A	20.25
84-89	MB, replacement	F-13480-4	15.75
86-89	(b4 5/89), PB, replacement	F-13480-10	17.25
89	(from 5/89), replacement	F-13480-10	17.25
89-93	(from 05/89), Motorcraft	F-13480-7	16.95
90-93	Replacement	F-13480-7A	20.25
94-96	Replacement	F-13480-10	17.25
94-96	Motorcraft	F-13480-9	21.95

MASTER CYLINDER

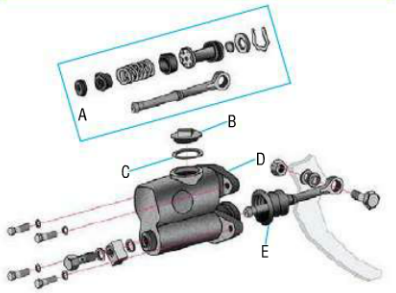

A	2004	Rebuild kit, master cylinder	C	2167	Gasket, master cylinder cap
B	2162	Cap, master cylinder	D	2140	Master cylinder
			E	2180	Boot, master cylinder



2004 REPAIR KIT, Master Cylinder

66	MB, 1"	F-2004-3	12.50
67	1"	F-2004-23	29.95
68-73	1"	F-2004-24	31.95
74-75	1"	F-2004-24	31.95
76-77	1"	F-2004-22	36.95
78-86	PB, 1"	F-2004-8	14.95
87	(b4 4/87), PB, 1"	F-2004-10	38.95
87-93	(from 4/87), PB, 1"	F-2004-11	31.95
94-96	PB, 1 1/8"	F-2004-21	41.75



2140 MASTER CYLINDER ASSY, Brake

Master cylinders listed below are NEW units, not rebuilds unless noted.

66	MB, 1" dia.	F-2140-4	81.95
67	1" dia., rebuilt, core chrg $40	F-2140-44	27.95
68-75	MB, 1" dia.	F-2140-32	82.95
76-77	MB, 1" dia., rebuilt, core chrg $20	F-2140-33	24.95
76-77	PB, 1" dia.	F-2140-9	41.95
78-86	PB, 1" dia.	F-2140-10	31.95
87	(b4 4/87), PB, 1" dia.	F-2140-12	127.95
87-93	(from 4/87), PB, 1 1/16 dia.	F-2140-13	65.75
94-96	PB, 1 1/16" dia., w/o spd ctrl	F-2140-13	65.75
94-96	PB, w/spd ctrl, 1 1/16" dia.	F-2140-34	114.95





2162 CAP, Brake Master Cylinder

67-75		2162-4**	12.08
76-86		F-2162-7	CALL
87-89	Includes gasket	F-2162-9	CALL
90-96		F-2162-10	19.07

****NOTE: 2162-4 is standard replacement zinc plated.***

**Chrome version of part number 2162-4 is available.

	2162-4A	8.25
Exact repro of original style 2162-4 is available also as	2162-4B	14.60
Custom machined billet aluminum version	2162-4BA	88.95



2167 GASKET, Master Cylinder Cap

67-75		F-2167-5A	4.95
76-79		F-2167-7A	4.95
90-96		F-2167-8	11.33

DRUM BRAKE-HYDRAULIC



2061/2062 CYLINDER ASSY, Front Brake

66-75	1 1/8", RH	F-2061-3	11.50
66-75	1 1/8", LH	F-2062-3	11.50

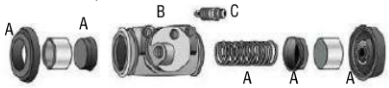

A 2128 Repair kit, wheel cylinder
B 2061, 2062 Wheel cylinder assy
C 2208 Bleeder screw

Items in blue -check listing for applications

2128 REPAIR KIT, Front Wheel Cylinder

66-75	1 1/8" dia.	2221-8	3.25



2078 HOSE ASSY, Front Drum Brake

66-70	RH or LH	F-2078-29	24.50
67-75	Center axle hose, body to axle	F-2078-30	42.75
71-75	RH or LH	F-2078-31	29.95

Inspect hoses for cracking, bulges or soft spots. Rubber hoses over time will expand under brake pressure resulting in a spongy pedal even if brake lines are bled free of air.



2261/2 CYLINDER ASSY, Rear Brake

66-73	13/16" dia., RH	2262-2	9.95
66-73	13/16" dia., LH	2262-2	9.95
74-75	2900# RA, 13/16" dia., RH	F-2261-14	22.95
74-75	2900# RA, 13/16" dia., LH	F-2262-14	22.95
74-75	3300# RA, 13/16" dia., RH	2262-2	9.95
74-75	3300# RA, 13/16" dia., LH	2262-2	9.95
76-96	15/16" dia., (84's built b4 10/83 must replace in pairs), RH	T-2261-2	8.95
76-96	15/16" dia., (84's built b4 10/83 must replace in pairs), LH	T-2262-2	8.95

J Brake Shoe Set



P Combi-Kit, Brake Hardware
M Spring Kit, Brake Shoe Retracting
A Holddown Kit, Brake Shoe



L Auto Adjuster Kit, Brake Shoe



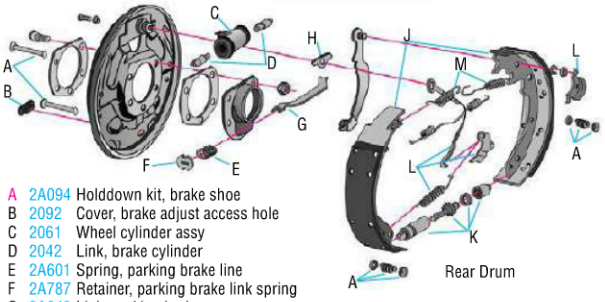

Rear Drum

A 2A094 Holddown kit, brake shoe
B 2092 Cover, brake adjust access hole
C 2061 Wheel cylinder assy
D 2042 Link, brake cylinder
E 2A601 Spring, parking brake line
F 2A787 Retainer, parking brake link spring
G 2A642 Link, parking brake
H 2028 Guide plate, brake shoe anchor pin

Items in blue -check listing for applications

Front Drum

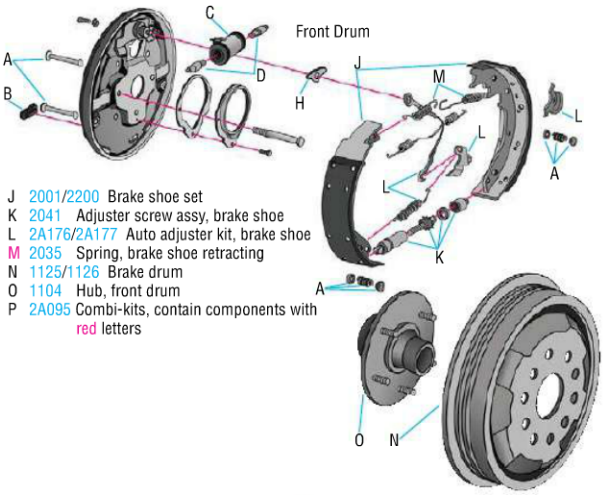

J 2001/2200 Brake shoe set
K 2041 Adjuster screw assy, brake shoe
L 2A176/2A177 Auto adjuster kit, brake shoe
M 2035 Spring, brake shoe retracting
N 1125/1126 Brake drum
O 1104 Hub, front drum
P 2A095 Combi-kits, contain components with red letters

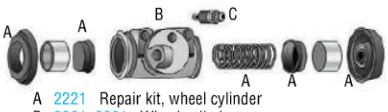

A 2221 Repair kit, wheel cylinder
B 2261, 2261 Wheel cylinder assy
C 2208 Bleeder screw

Items in blue -check listing for applications

2128 REPAIR KIT, Rear Brake Cylinder

Kits do one wheel cylinder.

66-75	13/16" dia.	2128-2	3.25
76-96	15/16" dia.	F-2128-3	3.25



2282 HOSE ASSY, Rear Brake

66-75		F-2282-21	35.75
76-77		F-2282-22	27.50
78-79		F-2282-23	14.75
80-96		F-2282-9	14.95

Inspect hoses for cracking, bulges or soft spots. Rubber hoses over time will expand under brake pressure resulting in a spongy pedal even if brake lines are bled free of air.

DRUM BRAKE-MECHANICAL



1125 DRUM, Brake

Front

66-67	(b4 67 ser#F30,001), 11 x 2" brakes	F-1125-3	42.75
67-70	(from 67 ser#F30,001), 11 x 2" brakes	F-1125-4	98.95
71-75	11 x 2" brakes	F-1125-3	42.75

Rear

66-75	10 x 2 1/2" brakes	F-1126-17	111.95
66-75	11 x 1 3/4" brakes	F-1126-1	41.50
76-86	11 1/32 x 2 1/4" brakes	F-1126-3	63.25
87-96	11 1/32 x 2 1/4" brakes	F-1126-5	64.95



2001 SHOE SET, Front Brakes

66-75	11 x 2", asbestos free	F-2001-15	44.50

2028 PLATE, Brake Shoe Anchor Pin

NEW!	66	(before serial# 872,001), rear	2028-2	2.50
NEW!	66-77	Front	2028-2	2.50



2035 SPRING KIT, Brake Shoe Retracting

Contains return springs as required per drum.

66-75	Front, 11 x 2"	T-2035-1K	4.95
66	Rear, 11 x 1 3/4"	T-2035-1K	4.95
66-75	Rear, 10 x 2 1/2"	F-2035-10	4.95
67-96	Rear, 11 x 1 3/4"	F-2035-2	4.75



2041 SCREW ASSY, Brake Adjuster

66-94	Front or rear, RH, 11" brakes	F-2041-3	6.25
66-94	Front or rear, LH, 11" brakes	F-2041-9	6.25
76-82	Rear, RH, 10" brake	2041-1	5.95
76-82	Rear, LH, 10" brake	F-2041-4	5.95

2049 SPRING, Brake Adjusting Screw

NEW!	67-80	10" or 11" brakes, pair	2049-1	2.95

2069 ANCHOR PIN, Brake Shoe Retaining Spring

66-75	Rear, 10 x 2 1/2" brake	F-2069-3	0.99

2092 COVER, Brake Adjuster Hole

66-96	Rubber, front or rear drum, original, each	2092-1	3.95
66-96	Rubber, front or rear drum, repro, pair	2092-1K	2.00



2A094 HOLDDOWN KIT, Brake Shoe

Kits contain pins, cups, springs, and "C" clips as required. See also 2A095 Combi-kit.

66-75	Front, 11 x 2" brakes	F-2A094-6	4.75	
66-75	Rear, 10 x 2 1/2" brakes	2A094-2	5.50	
66-75	Rear, 11 x 1 3/4" brakes, use short pins in kit	F-2A094-8	8.95	
76-82	Rear, 11 1/32 x 2 1/4" brakes	2A094-3	5.25	
81-96	Rear, 11 1/32 x 2 1/4" brakes	F-2A094-4	4.50	



2A095 COMBI-KIT, Brake Shoe

Kits include both shoe spring kits (2035) and shoe hold-down kits (2A094)

67-75	Front, 11 x 2" brake	F-2A095-10	9.50
67-75	Rear, 11 x 1 3/4"	F-2A095-9	8.95
76-82	Rear, 11 1/32" x 2 1/4" brakes	F-2A095-2	9.50
83-96	Rear, 11 1/32 x 2 1/4"	F-2A095-8	9.26



2A176/7 ADJUSTER KIT, Brake Shoe Automatic

Kits include lever, cable guide, cable and star wheel adjuster assy. Does not include lower shoe spring 2049

67-75	Front, LH, 11" brakes	F-2A177-1	9.51
67-75	Front, RH, 11" brakes	F-2A176-1	9.51
67-75	Rear, LH, 10" brakes	F-2A177-6	9.94
67-75	Rear, RH, 10" brakes	F-2A176-6	9.94
67-75	Rear, LH, 11" brakes	F-2A177-1	9.51
67-75	Rear, RH, 11" brakes	F-2A176-1	9.51
76-96	Rear, LH, 11 1/32 x 2 1/4" brakes	F-2A177-2	10.75
76-96	Rear, RH, 11 1/32 x 2 1/4" brakes	F-2A176-2	10.75



2200 SHOE SET, Rear Brake

Premium relined brake shoes!

66-73	10 x 2 1/2" brakes	F-2200-13	26.95
66-75	11 x 1 3/4" brakes	F-2200-2	43.50
76-83	11 1/32 x 2 1/4"	T-2001-1	37.95
84-85	(b4 11/84), 11 1/32 x 2 1/4" brakes	F-2200-5	64.50
85-96	(from 11/84), 11 1/32 x 2 1/4" brakes	T-2001-1	37.95

DISC BRAKE-HYDRAULIC

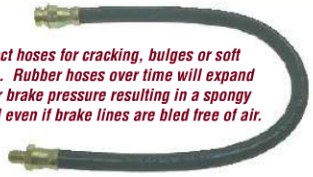

Inspect hoses for cracking, bulges or soft spots. Rubber hoses over time will expand under brake pressure resulting in a spongy pedal even if brake lines are bled free of air.

2078 HOSE ASSY, Front Disc Brake

To caliper:

	LH	price	RH	price
76-77	F-2078-32A	34.95	F-2078-32B	30.95
78-79	F-2078-10A	19.95	F-2078-10B	24.95
80-89	F-2078-12A	16.95	F-2078-12B	16.95
90-92	F-2078-33A	17.50	F-2078-33B	17.50
93	F-2078-40A	29.50	F-2078-40B	29.50
94-96	F-2078-38A	30.50	F-2078-38B	30.50

Center axle hose, body to axle:

76-77		F-2078-51	58.50
78-79		F-2078-9	39.95



385116 BOLT, Brake Hose

"Banjo bolt", attaches hose block to caliper, uses two F-2149-1 washers per bolt.

66-96	Each, 5/16"	385116-S	5.40



2079 BRAKE LINE KIT, Braided Stainless

Street legal, meets strict guidelines of DOT MVSS-106 and legal in all 50 states. Increases braking performance and reduces brake pedal travel due to the elimination of hose expansion common to factory rubber hoses.

66-77	W/4" lift, set of 2	F-2079-6A	64.95
78-79	W/4" lift, set of 2	F-2079-7A	69.95
80-89	W/4" lift, set of 3	F-2079-8A	84.95
90-96	W/4" lift, set of 3	F-2079-9A	101.95



2B120/1 CALIPER ASSY, Rebuilt Front

Note core charges on each caliper. Some calipers were switched (RH/LH) in production. Always replace calipers in pairs. See core information and requirements in the information section at the end of this catalog. 73mm.

76-79	RH, core chrg $60	F-2B120-1	19.50
76-79	LH, core chrg $60	F-2B121-1	19.50
80-85	RH, core chrg $60	F-2B120-2	18.50
80-85	LH, core chrg $60	F-2B121-2	18.50
86-91	RH, core chrg $60	F-2B120-4	21.25
86-91	LH, core chrg $60	F-2B121-4	21.25
92-93	Steel, RH, core chrg $60	F-2B120-4A	28.95
92-93	Steel, LH, core chrg $60	F-2B121-4A	28.95
94-96	Steel, RH, core chrg $75	F-2B120-10	44.50
94-96	Steel, LH, core chrg $75	F-2B121-10	44.50



2196 PISTON, Disc Brake Caliper

76-96	73mm, steel	F-2196-1	23.95
80-96	73mm, phenolic	F-2196-5	17.95



2221 REPAIR KIT, Front Caliper

Includes seals and boots as reqd.

76-86	73mm, use with original caliper*	F-2221-3	3.25
87-96	73mm, use with original caliper*	F-2221-5	5.50

Note: 84-86 Bronco may require part# F-2221-5 if calipers have been previously replaced, also 87-91 Bronco may require part# F-2221-3 if calipers have been previously replaced.

DISC BRAKE-MECHANICAL



1102 ROTOR, Front Disc Brake

76-86		F-1102-2	49.95
87-88	Manual locking hubs	F-1102-4	66.95
87-88	Automatic locking hubs	F-1102-2	49.95
89-93		F-1102-2	49.95
94-96	Excl 3.07 ratio FA	F-1102-24	74.95
94-96	3.07 RA ratio	F-1102-2	49.95

1102 HUB, Front Disc Brake Rotor

Use with F-1102-2 rotor.

76-86		F-1102-2A	83.95
87-88	Automatic locking hubs	F-1102-2A	83.95
89-92		F-1102-2A	83.95



2001 PAD SET, Disc Brake

76-86		F-2001-6	39.95
87-93		F-2001-8	45.65
94-96		F-2001-17	55.95

Front Disc Brake – Typical Single Piston Caliper

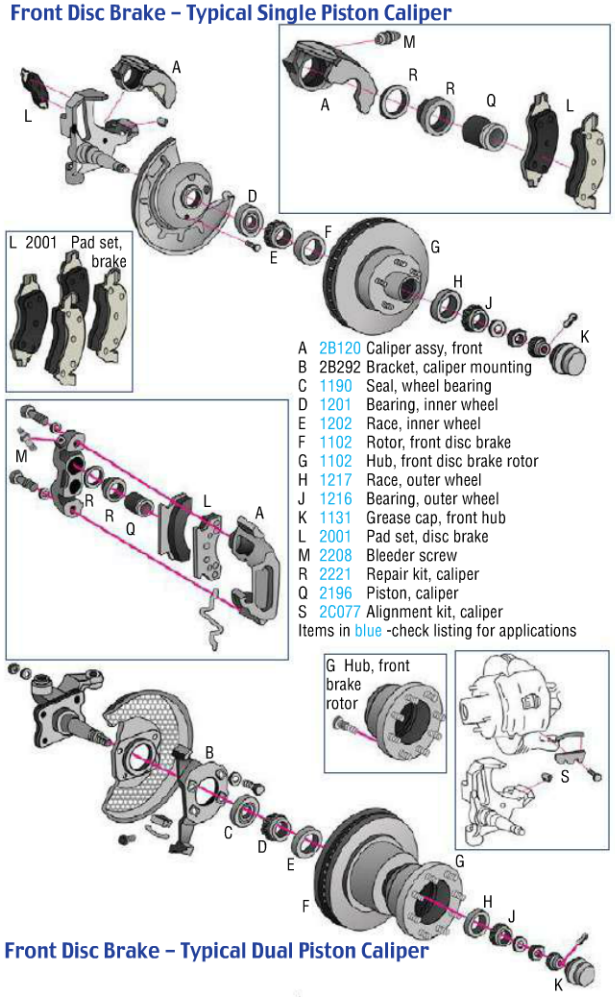

A 2B120 Caliper assy, front
B 2B292 Bracket, caliper mounting
C 1190 Seal, wheel bearing
D 1201 Bearing, inner wheel
E 1202 Race, inner wheel
F 1102 Rotor, front disc brake
G 1102 Hub, front disc brake rotor
H 1217 Race, outer wheel
J 1216 Bearing, outer wheel
K 1131 Grease cap, front hub
L 2001 Pad set, disc brake
M 2208 Bleeder screw
R 2221 Repair kit, caliper
Q 2196 Piston, caliper
S 2C077 Alignment kit, caliper
Items in blue -check listing for applications

Front Disc Brake – Typical Dual Piston Caliper



F-2C077-1

2C077 ALIGNMENT KIT, Brake Caliper

Kits include retainer or anti-rattle clip, sleeve-stabilizer or support plate and support springs as reqd.

76-79		F-2C077-2	19.93
80-84		F-2C077-1	19.95
85		F-2C077-2	19.93
86-93		F-2C077-3	23.94
94-96		F-2C077-7	17.95



2C150 GUIDE PIN, Disc Brake

76-85		F-2C150-14	2.95
86-93		F-2C150-16	10.96
94-96		F-2C150-1	3.25

SSBC BRAKING RULES℠

DISC BRAKE CONVERSION KITS

Kits include all required parts to convert your front drums to performance oriented disc brakes. These conversions bolt to the stock spindle and require a 15" wheel utilizing a 5x5.5" bolt pattern.

66-75	Standard kit, 73mm piston, 12" standard rotor	F-1102-8AK	994.95
66-75	Big brake kit, 80mm piston, 12" slotted and plated rotor	F-1102-8BK	1294.95

POWER BRAKE



2006 POWER BRAKE CONVERSION KITS

By Master Power Brake. Complete conversion kit. Preset shipping of $20.00 per unit, not eligible towards $300 free shipping offer.

66-77 Angled bracket clears engine, 8" dual diaphragm booster F-2005-38 399.95

Add power brakes with these new mini boosters. All use original brake pedal. Modification to existing brake lines will be required. Combination valve is not included with conversions, see 2B091 in "General Brake" section. Preset shipping of $20.00 per unit, not eligible towards $300 free shipping offer.

66-77 W/o master cylinder F-2006-8A 374.95
66-77 4 wheel disc F-2006-8D 449.95

We proudly feature quality brake components from:

WAGNER® Brake Products



F-2005-6

2005 BOOSTER ASSY, Power brake

ALL rebuilt boosters include a rebuilt master cylinder unless noted otherwise, returned cores must include a matching master cylinder and be returned in the manufacturers box to receive core credit. Please note core charges on each booster assy. See core information and requirements in the information section at the end of this catalog.

78-79 (b4 11/78), core chrg $90 ..... F-2005-6 125.50
80-83 Core chrg $90 ..... F-2005-9 120.95
84-86 Core chrg $90 ..... F-2005-10 117.50
87 (b4 4/87), core chrg $90 ..... F-2005-26 155.95
87-88 (from 4/87), core chrg $90 ..... F-2005-27 153.95
89-93 Core chrg $90 ..... F-2005-28 159.95
94-96 W/o master cylinder, core chrg $90 ..... F-2005-31 85.50



2365 CHECK VALVE, Power Brake Booster

78-96 Replacement, single port F-2365-2 3.25



Andrew Gouge

When available we provide Wagner's ThermoQuiet Premium shoes and pads. This friction material is available in semi-metallic and non-metallic formulations. The asbestos-free friction material is bonded to the backing plate for exceptional strength and long life. Pads feature integrally molded dampers for maximum noise control. Exceeds OEM specs and outperforms the competition!



ThermoQUIET LT™

ANTI-LOCK SYSTEM



F-2C219-3



F-2B373-1

2C219 CONTROL MODULE, ABS, Rebuilt

Please note core charges on each item. See core information and requirements in the information section at the end of this catalog.

87-89 Core chrg $60 ..... F-2C219-1 83.95
NEW! 87-89 ID# E8TF-2C018-AA F-2C219-1A 253.95
NEW! 87-89 ID# E7TF-2C018-AB, AC F-2C219-10A 83.95
NEW! 88-91 ..... F-2C219-2A CALL
NEW! 92 Rear wheel ABS, ID# F3PF-2C018-CA F-2C219-3A 83.95
92 Core chrg $60 ..... F-2C219-3 83.95

2B373 HYDRAULIC CONTROL UNIT, ABS, Rebuilt

Please note core charges on each item. See core information and requirements in the information section at the end of this catalog.

87-92 Core chrg $75 ..... F-2B373-1 144.95

PARKING BRAKE

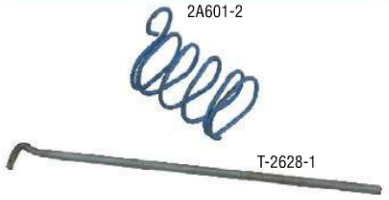

2A601-2

T-2628-1

2A601 SPRING, Parking Brake Link

66-75 Excl 10" x 2 1/2" Bendix brakes, 2 req'd 2A601-2 1.25
76-96 11" x 2 1/4" brakes, 4 reqd . 2A601-3 4.00

2628 EQUALIZER ROD, Parking Brake

66-79 ..... T-2628-1 14.85

Note: Rod is a universal length of 12", cut to fit your application.



2A635 CABLE ASSY, Rear Parking Brake

73-74 RH, w/2750# RA F-2A635-18B 26.95
73-74 LH, w/2750#, 3300# RA F-2A635-18A 24.95
73-74 RH, w/3300# RA F-2A635-18B 26.95
75 LH, w/2750#, 3300# RA F-2A635-18A 24.95
76-77 RH F-2A635-22B 24.95
78-79 RH F-2A635-23B 39.95
78-79 LH F-2A635-23A 39.50
80-85 (b4 11/84), RH F-2A635-10B 17.95
80-85 (b4 11/84), LH F-2A635-10A 19.75
85-91 (from 11/84), RH F-2A635-24B 16.75
85-91 (from 11/84), LH F-2A635-24A 15.95
92-96 RH F-2A635-25B 18.95
92-96 LH F-2A635-25A 22.75



2760 HANDLE, Emergency Brake Release

80-91	Screw on, replacement	F-2760-1	14.95

2780 CONTROL ASSY, Parking Brake

NEW! 80-89		F-2780-1	158.78

2A787 RETAINER, Parking Brake Spring

66-68	Washer	2A787-1	5.50



2853 CABLE ASSY, Front Parking Brake

66-76	Approx 53" long	F-2853-27	26.95
78-79		F-2853-29	44.75
80-82	(b4 3/82)	F-2853-30	19.95
82-83	(from 3/82)	F-2853-31	30.25
84-91		F-2853-32	34.75
92-96		F-2853-33	21.25

2A793 CABLE ASSY, Parking Brake, Intermediate

92-96		F-2A793-7	8.25

15A891 SWITCH, Park Brake Signal

NEW! 84-86		F-15A891-1	8.95

STOP

Throughout this catalog notations of "RH" (right hand) indicate the Passenger side, notations of "LH" (left hand) indicate the Drivers side.

A 2454 Pad, parking brake pedal
B 2760 Handle, parking brake
C 2853 Cable, front parking brake
D 2A605 Lever, parking brake equilizer
E 2A651 Spring, parking brake equilizer

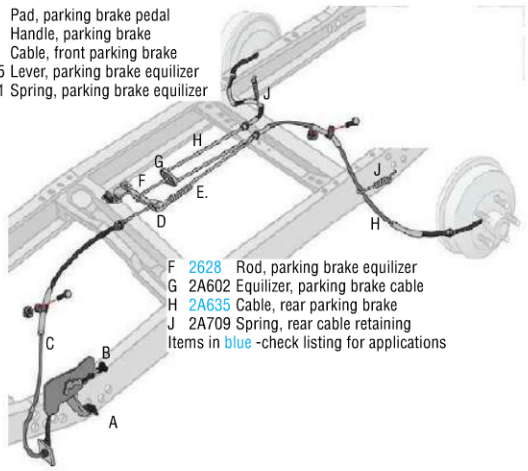

F 2628 Rod, parking brake equilizer
G 2A602 Equilizer, parking brake cable
H 2A635 Cable, rear parking brake
J 2A709 Spring, rear cable retaining
Items in blue -check listing for applications

GVW and GAW

Gross vehicle weight and Gross axle weight ratings can be found on your ID plate located in the drivers side door jamb. Early truck may need to decode the axle codes on this plate. See the index to locate the Axle identification section for a listing of axle codes and applications and weight ratings.

Brake Chart price list

See brake parts listings on the following pages for specific applications. Prices for the part numbers found on those pages can be located here in numerical order. Core charges for rebuilt items are listed immediately below the rebuilt part and have an "X" suffix.

1012	
1012-1	0.48
1102	
F-1102-2	49.95
F-1102-2A	83.95
F-1102-4	66.95
F-1102-24	74.95
1107	
1107-1	1.75
1107-3	1.75
F-1107-1	1.80
F-1107-4	1.60
F-1107-16	1.75
1125	
F-1125-3	42.75
F-1125-4	98.95
1126	
F-1126-1	41.50
F-1126-3	63.25
F-1126-5	64.95
F-1126-17	111.95

2001	
F-2001-6	39.95
F-2001-8	45.65
F-2001-15	44.50
F-2001-17	55.95
T-2001-1	37.95
2004	
F-2004-3	12.50
F-2004-23	29.95
F-2004-24	31.95
F-2004-22	36.95
F-2004-8	14.95
F-2004-10	38.95
F-2004-11	31.95
F-2004-21	41.75
2061	
F-2061-3	11.50
2062	
F-2062-3	11.50
2C077	
F-2C077-1	19.95
F-2C077-2	19.93
F-2C077-3	23.94
F-2C077-7	17.95

2078	
F-2078-9	39.95
F-2078-10A	19.95
F-2078-10B	24.95
F-2078-12A	16.95
F-2078-12B	16.95
F-2078-29	24.50
F-2078-30	42.75
F-2078-31	29.95
F-2078-32A	34.95
F-2078-32B	30.95
F-2078-33A	17.50
F-2078-33B	17.50
F-2078-38A	30.50
F-2078-38B	30.50
F-2078-40A	29.50
F-2078-40B	29.50
F-2078-51	58.50
2A094	
2A094-2	5.50
2A094-3	5.25
F-2A094-4	4.50
F-2A094-6	4.75
F-2A094-8	8.95
2A095	
F-2A095-2	9.50
F-2A095-8	9.26
F-2A095-9	8.95
F-2A095-10	9.50
2128	
2128-2	3.25
2128-3	4.95
F-2128-3	3.25
2140	
F-2140-4	81.95
F-2140-9	41.95
F-2140-10	31.95
F-2140-12	127.95
F-2140-13	65.75
F-2140-32	82.95
F-2140-33	24.95
+core chrg below	
F-2140-33X	20.00

F-2140-34	114.95
F-2140-44	27.95
+core chrg below	
F-2140-44X	40.00
2C150	
F-2C150-1	3.25
F-2C150-14	2.95
F-2C150-16	10.96
2A176	
F-2A176-1	9.51
F-2A176-2	10.75
F-2A176-6	9.94
2A177	
F-2A177-1	9.51
F-2A177-2	10.75
F-2A177-6	9.94
2200	
F-2200-2	43.50
F-2200-5	64.50
F-2200-13	64.95
F-2200-14	34.50
2221	
2221-8	3.25
F-2221-3	3.25
F-2221-5	5.50
2282	
F-2282-9	14.95
F-2282-21	35.75
F-2282-22	27.50
F-2282-23	14.75
2196	
F-2196-1	23.95
F-2196-5	17.95
2261	
F-2261-13	9.95
F-2261-14	22.95
T-2261-2	8.95

2262	
2262-2	9.95
F-2262-14	22.95
T-2262-2	8.95
2B120	
F-2B120-1	19.50
+core chrg below	
F-2B120-1X	60.00
F-2B120-2	18.50
+core chrg below	
F-2B120-2X	60.00
F-2B120-4	21.25
+core chrg below	
F-2B120-4X	60.00
F-2B120-4A	28.95
+core chrg below	
F-2B120-4AX	60.00
F-2B120-10	44.50
+core chrg below	
F-2B120-10X	75.00
2B121	
F-2B121-1	19.50
+core chrg below	
F-2B121-1X	60.00
F-2B121-2	18.50
+core chrg below	
F-2B121-2X	60.00
F-2B121-4	21.25
+core chrg below	
F-2B121-4X	60.00
F-2B121-4A	28.95
+core chrg below	
F-2B121-4AX	60.00
F-2B121-10	44.50
+core chrg below	
F-2B121-10X	75.00

Year	Application	F=front R=rear Axle	Size	Wheel Cylinder/Disc Caliper Left	Right	Kit	Piston	Hose Left or Center	Right	M=manual P=power V=hydrovac Type & Size	Master Cylinder N=new R=rebuilt New/Rebuilt	Number	Kit
66		F	1 1/8"	F-2062-3	F-2061-3	2221-8	-	F-2078-29	F-2078-29	M 1"	N	F-2140-4	F-2004-3
		R	13/16"	2262-2	F-2261-13	2128-2	-	F-2282-21					
67-70		F	1 1/8"	F-2062-3	F-2061-3	2221-8	-	F-2078-29	F-2078-29	67 M 1"	R	F-2140-44	F-2004-23
		R	13/16"	2262-2	F-2261-13	2128-2	-	F-2282-21		68-70 M 1"	N	F-2140-32	F-2004-24
	Front axle center hose							F-2078-30					
71-73		F	1 1/8"	F-2062-3	F-2061-3	2221-8	-	F-2078-31	F-2078-31	M 1"	N	F-2140-32	F-2004-24
		R	13/16"	2262-2	F-2261-13	2128-2	-	F-2282-21					
	Front axle center hose							F-2078-30					
74-75		F	1 1/8"	F-2062-3	F-2061-3	2221-8	-	F-2078-31	F-2078-31	M 1"	N	F-2140-32	F-2004-24
	2900# RA	R	13/16"	F-2262-14	F-2261-14	2128-2	-	F-2282-21					
	3300# RA	R	13/16"	2262-2	F-2261-13	2128-2	-	F-2282-21					
	Front axle center hose							F-2078-30					
76-77	Disc	F	73mm	F-2B121-1	F-2B120-1	F-2221-3	F-2196-1	F-2078-32A	F-2078-32B	M 1"	R	F-2140-33	F-2004-22
		R	15/16"	T-2262-2	T-2261-2	F-2128-3	-	F-2282-22		P 1"	N	F-2140-9	F-2004-22
	Front axle center hose							F-2078-51					
78-79	Disc	F	73mm	F-2B121-1	F-2B120-1	F-2221-3	F-2196-1	F-2078-10A	F-2078-10B	P 1"	N	F-2140-10	F-2004-8
		R	15/16"	T-2262-2	T-2261-2	F-2128-3	-	F-2282-23					
	Front axle center hose							F-2078-9					
80	Disc, phenolic piston	F	73mm	F-2B121-2	F-2B120-2	F-2221-3	F-2196-5	F-2078-12A	F-2078-12B	P 1"	N	F-2140-10	F-2004-8
	Steel piston	F	73mm				F-2196-1						
		R	15/16"	T-2262-2	T-2261-2	F-2128-3	-	F-2282-9					
81-83	Disc, phenolic piston	F	73mm	F-2B121-2	F-2B120-2	F-2221-3	F-2196-5	F-2078-12A	F-2078-12B	P 1"	N	F-2140-10	F-2004-8
	Steel piston	F	73mm				F-2196-1						
		R	15/16"	T-2262-2	T-2261-2	F-2128-3	-	F-2282-9					
84	Disc, phenolic piston	F	73mm	F-2B121-2	F-2B120-2	F-2221-3	F-2196-5	F-2078-12A	F-2078-12B	P 1"	N	F-2140-10	F-2004-8
	Steel piston	F	73mm				F-2196-1						
		R	15/16"	T-2262-2	T-2261-2	F-2128-3	-	F-2282-9					
85	Disc, phenolic piston	F	73mm	F-2B121-2	F-2B120-2	F-2221-3	F-2196-5	F-2078-12A	F-2078-12B	P 1"	N	F-2140-10	F-2004-8
	Steel piston	F	73mm				F-2196-1						
		R	15/16"	T-2262-2	T-2261-2	F-2128-3	-	F-2282-9					
86	Disc, phenolic piston	F	73mm	F-2B121-4	F-2B120-4	F-2221-3	F-2196-5	F-2078-12A	F-2078-12B	P 1"	N	F-2140-10	F-2004-8
	Steel piston	F	73mm				F-2196-1						
		R	15/16"	T-2262-2	T-2261-2	F-2128-3	-	F-2282-9					
87-88	Disc, phenolic piston	F	73mm	F-2B121-4	F-2B120-4	F-2221-5	F-2196-5	F-2078-12A	F-2078-12B	b4 4/87 P 1"	N	F-2140-12	F-2004-10
	Steel piston	F	73mm				F-2196-1			from 4/87 P 1 1/16"	N	F-2140-13	F-2004-11
		R	15/16"	T-2262-2	T-2261-2	F-2128-3	-	F-2282-9					
89	Disc, phenolic piston	F	73mm	F-2B121-4	F-2B120-4	F-2221-5	F-2196-5	F-2078-12A	F-2078-12B	P 1 1/16"	N	F-2140-13	F-2004-11
	Steel piston	F	73mm				F-2196-1						
		R	15/16"	T-2262-2	T-2261-2	F-2128-3	-	F-2282-9					
90-93	Disc, phenolic piston	F	73mm				F-2196-5			P 1 1/16"	N	F-2140-13	F-2004-11
	Steel piston	F	73mm				F-2196-1						
	90-91	F	73mm	F-2B121-4	F-2B120-4	F-2221-5		F-2078-50A	F-2078-50B				
	92	F	73mm	F-2B121-4A	F-2B120-4A	F-2221-5		F-2078-33A	F-2078-33B				
	93	F	73mm	F-2B121-4A	F-2B120-4A	F-2221-5		F-2078-40A	F-2078-40B				
		R	15/16"	T-2262-2	T-2261-2	F-2128-3	-	F-2282-9					
94-96	Disc, phenolic piston	F	73mm	F-2B121-10	F-2B120-10	F-2221-5	F-2196-5	F-2078-38A	F-2078-38B	w/cruise P 1 1/8"	N	F-2140-34	F-2004-21
	Steel piston	F	73mm				F-2196-1			w/o cruise P 1 1/8"	N	F-2140-13	F-2004-21
		R	15/16"	T-2262-2	T-2261-2	F-2128-3	-	F-2282-9					

Variation/Notes	Pad or Shoe Size	F=front R=rear Axle	Pad or Shoe	Drum Auto Adjuster kit Left	Right	Disc Align or Combi-Kit	Guide Pin or Hold Down Kit	Rotor or Drum	Wheel Bolt (stud)	Wheel Nut
	11x2"	F	F-2001-15	-	-	-	F-2A094-6	F-1125-3	1107-3	1012-1
	10x2 1/2"	R	F-2200-13	-	-	-	2A094-2	F-1126-17	1107-1	1012-1
	11x1 3/4"	R	F-2200-2	-	-	-	F-2A094-8	F-1126-1	1107-1	1012-1
b4 67 ser#F30,001	11x2"	F	F-2001-15	F-2A177-1	F-2A176-1	F-2A095-10	F-2A094-6	F-1125-3	1107-3	1012-1
	10x2 1/2"	R	F-2200-13	F-2A177-6	F-2A176-6	F-2A095-13	2A094-2	F-1126-17	1107-1	1012-1
	11x1 3/4"	R	F-2200-2	F-2A177-1	F-2A176-1	F-2A095-9	F-2A094-8	F-1126-1	1107-1	1012-1
from 67 ser#F30,001	11x2"	F	F-2001-15	F-2A177-1	F-2A176-1	F-2A095-10	F-2A094-6	F-1125-4	1107-1	1012-1
	10x2 1/2"	R	F-2200-13	F-2A177-6	F-2A176-6	F-2A095-13	2A094-2	F-1126-17	1107-1	1012-1
	11x1 3/4"	R	F-2200-2	F-2A177-1	F-2A176-1	F-2A095-9	F-2A094-8	F-1126-1	1107-1	1012-1
	11x2"	F	F-2001-15	F-2A177-1	F-2A176-1	F-2A095-10	F-2A094-6	F-1125-3	1107-3	1012-1
	10x2 1/2"	R	F-2200-13	F-2A177-6	F-2A176-6	F-2A095-13	2A094-2	F-1126-17	1107-1	1012-1
	11x1 3/4"	R	F-2200-2	F-2A177-1	F-2A176-1	F-2A095-9	F-2A094-8	F-1126-1	1107-1	1012-1
Full cast front drum	11x2"	F	F-2001-15	F-2A177-1	F-2A176-1	F-2A095-10	F-2A094-6	F-1125-3	1107-3	1012-1
10" rear brake	10x2 1/2"	R	F-2200-14	F-2A177-6	F-2A176-6	F-2A095-13	2A094-2	F-1126-17	1107-1	1012-1
11" rear brake	11x1 3/4"	R	F-2200-2	F-2A177-1	F-2A176-1	F-2A095-9	F-2A094-8	F-1126-1	1107-1	1012-1
Rotor does not include hub		F	F-2001-6	-	-	F-2C077-2	F-2C150-14	F-1102-2	F-1107-4	1012-1
Hub for front rotor F-1102-2		F						F-1102-2A		
	11 1/32"x2 1/4"	R	T-2001-1	F-2A177-2	F-2A176-2	F-2A095-2	2A094-3	F-1126-3	F-1107-1	1012-1
Rotor does not include hub		F	F-2001-6	-	-	F-2C077-2	F-2C150-14	F-1102-2	F-1107-4	1012-1
Hub for front rotor F-1102-2		F						F-1102-2A		
	11 1/32"x2 1/4"	R	T-2001-1	F-2A177-2	F-2A176-2	F-2A095-2	2A094-3	F-1126-3	F-1107-1	1012-1
Rotor does not include hub		F	F-2001-6	-	-	F-2C077-1	F-2C150-14	F-1102-2	F-1107-4	1012-1
Hub for front rotor F-1102-2		F						F-1102-2A		
	11 1/32"x2 1/4"	R	T-2001-1	F-2A177-2	F-2A176-2	F-2A095-2	2A094-3	F-1126-3	F-1107-1	1012-1
Rotor does not include hub		F	F-2001-6	-	-	F-2C077-1	F-2C150-14	F-1102-2	F-1107-4	1012-1
Hub for front rotor F-1102-2		F						F-1102-2A		
81-82	11 1/32"x2 1/4"	R	T-2001-1	F-2A177-2	F-2A176-2	F-2A095-2	2A094-3	F-1126-3	F-1107-1	1012-1
83	11 1/32"x2 1/4"	R	T-2001-1	F-2A177-2	F-2A176-2	F-2A095-8	F-2A094-4	F-1126-3	F-1107-1	1012-1
Rotor does not include hub		F	F-2001-6	-	-	F-2C077-1	F-2C150-14	F-1102-2	F-1107-4	1012-1
Hub for front rotor F-1102-2		F						F-1102-2A		
	11 1/32"x2 1/4"	R	F-2200-5	F-2A177-2	F-2A176-2	F-2A095-8	F-2A094-4	F-1126-3	F-1107-1	1012-1
Rotor does not include hub		F	F-2001-6	-	-	F-2C077-2	F-2C150-14	F-1102-2	▼	1012-1
Hub for front rotor F-1102-2		F						F-1102-2A		
4.10 FA ratio		F							F-1107-16	
Exc. 4.10 FA ratio		F							F-1107-4	
(b4 11/84)	11 1/32"x2 1/4"	R	F-2200-5	F-2A177-2	F-2A176-2	F-2A095-8	F-2A094-4	F-1126-3	F-1107-1	1012-1
(from 11/84)	11 1/32"x2 1/4"	R	T-2001-1	F-2A177-2	F-2A176-2	F-2A095-8	F-2A094-4	F-1126-3	F-1107-1	1012-1
Rotor does not include hub, manual brake		F	F-2001-6	-	-	F-2C077-3	F-2C150-16	F-1102-2	F-1107-4	1012-1
Hub for front rotor F-1102-2		F						F-1102-2A		
	11 1/32"x2 1/4"	R	T-2001-1	F-2A177-2	F-2A176-2	F-2A095-8	F-2A094-4	F-1126-3	F-1107-4	1012-1
87 manual lock hubs		F	F-2001-8	-	-	F-2C077-3	F-2C150-16	F-1102-4	F-1107-16	1012-1
87-88 auto lock hubs		F	F-2001-8	-	-	F-2C077-3	F-2C150-16	F-1102-2	F-1107-4	1012-1
88 (b4 5/88), manual lock hubs		F	F-2001-8	-	-	F-2C077-3	F-2C150-16	F-1102-4	F-1107-16	1012-1
88 (from 5/88), manual lock hubs		F	F-2001-8	-	-	F-2C077-3	F-2C150-16	F-1102-4	F-1107-4	1012-1
	11 1/32"x2 1/4"	R	T-2001-1	F-2A177-2	F-2A176-2	F-2A095-8	F-2A094-4	F-1126-5	F-1107-1	1012-1
Hub for rotor F-1102-2		F						F-1102-2A		
Rotor does not include hub		F	F-2001-8	-	-	F-2C077-3	F-2C150-16	F-1102-2	▼	1012-1
Hub for rotor F-1102-2		F						F-1102-2A		
Exc. 3.54 FA ratio		F							F-1107-4	
3.54 FA ratio, manual hub, exc. ltd slip, HD front end or snow		F							F-1107-16	
3.54 FA ratio, manual hub, HD front end or snow, exc. ltd slip		F							F-1107-4	
3.54 FA ratio, manual hubs & limited slip FA		F							F-1107-4	
3.54 FA ratio, auto lock hubs		F							F-1107-4	
	11 1/32"x2 1/4"	R	T-2001-1	F-2A177-2	F-2A176-2	F-2A095-8	F-2A094-4	F-1126-5	F-1107-1	1012-1
Rotor does not include hub		F	F-2001-8	-	-	F-2C077-3	F-2C150-16	F-1102-2	F-1107-4	1012-1
Hub for rotor F-1102-2 (90-92 only!)		F						F-1102-2A		
	11 1/32"x2 1/4"	R	T-2001-1	F-2A177-2	F-2A176-2	F-2A095-8	F-2A094-4	F-1126-5	F-1107-1	1012-1
Exc. 3.07 FA ratio		F	F-2001-17	-	-	F-2C077-7	F-2C150-1	F-1102-24	F-1107-4	1012-1
3.07 FA ratio		F	F-2001-17	-	-	F-2C077-7	F-2C150-1	F-1102-2	F-1107-4	1012-1
	11 1/32"x2 1/4"	R	T-2001-1	F-2A177-2	F-2A176-2	F-2A095-8	F-2A094-4	F-1126-5	F-1107-4	1012-1

SUSPENSION SECTION INFORMATION

Suspension/steering rebuild, by year pg 34
Front spring....pg 38
Shock absorber....pg 40
Rear anti-sway bar....pg 41
Front axle....pg 37
Rear spring....pg 38
Front anti-sway bar....pg 40
Track bar....pg 41

Some abbreviations found in this section (alphabetical-read across):

chrg ..... charge (core charge)	*dia. ..... diameter*
DPC ..... Dual piston caliper	*DRW ..... Dual rear wheels*
excl ..... exlcudes	*FA ..... Front axle*
GVW ..... Gross vehicle weight	*HD ..... Heavy duty*
incl ..... includes	*I ..... litre (metric engine size)*
LH ..... drivers side	*MB ..... manual brakes*
mm ..... millimeter	*M/T ..... Manual transmission*
OE ..... Original equipment style	*pc (s) ..... Piece (s)*
RA ..... Rear axle	*Repl'mt ..... Replacement*
reqd ..... Required	*reqs ..... Requires*
RH ..... passenger side	*ser# ..... serial number*
SRW ..... Single rear wheel	*w/ ..... Used with*
W/o ..... Used without	*WB ..... Wheel base*

 # pounds-when used following a number (8500#= 8500 pounds)
A complete listing of abbreviations may be found at the rear of this catalog.

SUSPENSION/STEERING REBUILD

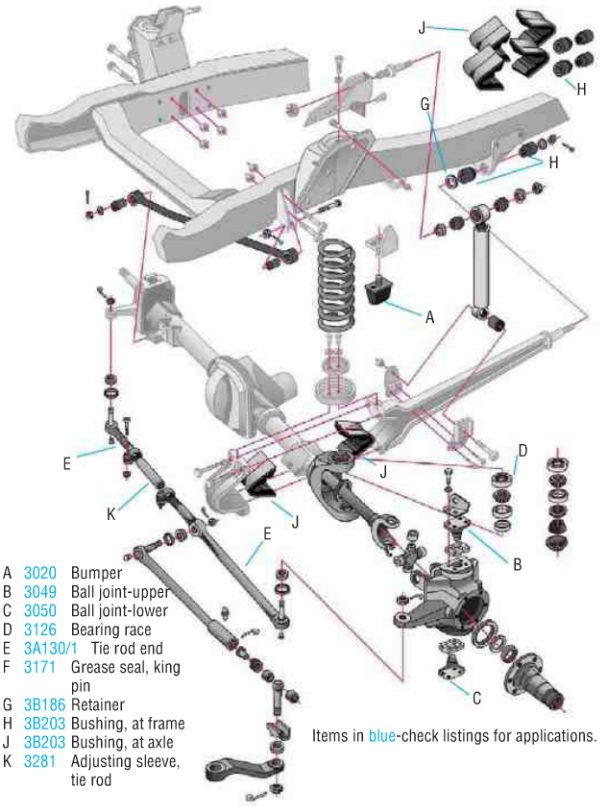

A 3020 Bumper
B 3049 Ball joint-upper
C 3050 Ball joint-lower
D 3126 Bearing race
E 3A130/1 Tie rod end
F 3171 Grease seal, king pin
G 3B186 Retainer
H 3B203 Bushing, at frame
J 3B203 Bushing, at axle
K 3281 Adjusting sleeve, tie rod

Items in blue-check listings for applications.

1966–1975

66-75	Bumper, front axle, on frame, 2 reqd	F-3020-5	10.00
66-75	Ball joint, upper	F-3049-1	41.95
66-75	Ball joint, lower, heavy duty	F-3050-1A	37.80
66-75	Bearing assy, king pin, on spindle	F-3123-5	9.15
66-71	Bearing assy, king pin, on spindle bolt	F-3123-3	18.85
66-71	Bearing race, king pin, (b4 71 ser#K20,001)	F-3126-1	7.50
66-75	Tie rod, RH outer, 5.20"	F-3A130-8	58.25
66-75	Tie rod, LH outer, 41.80"	F-3A131-23	161.95
66-71	Grease seal, spindle pin bearing, (b4 71 ser#K20,001), 4 reqd	F-3171-1	5.80
66-75	Bushing retainer, radius arm front	F-3B186-1	5.83
66-75	Insulator, front radius arm at axle, 4 reqd	F-3B203-1	6.50
66-75	Bushing set, front radius arm at frame, improved design	F-3B203-13	28.15
66-75	Bushing set, front radius arm at frame, improved HD design	F-3B203-13A	40.45
66	Oil seal, front axle shaft, inner, (from 3/17/66)	F-3254-7	6.70
67-71	Oil seal, front axle shaft, inner, (b4 71 ser#K20,001), w/Dana 30 FA	F-3254-2	8.20
71-75	Oil seal, front axle shaft, inner, (from 71 ser#K20,001), w/Dana 44 FA	F-3254-3	13.10
66-75	Adjusting sleeve assy, tie rod, 5.50"	F-3281-6	27.65
66-75	Drag link, 28.38"	F-3304-16	179.95

Items in blue-check listings for applications.

A 3020 Bumper
B 3049 Ball joint-upper
C 3050 Ball joint-lower
D 3123 Bearing assy, pin
E 3A130 Tie rod, RH
F 3A131 Tie rod, LH outer
G 3A131 Tie rod, LH inner
H 3B203 Bushing, at axle
J 3B203 Bushing, at frame
K 3281 Adjusting sleeve
L 5310 Coil spring
M 18124 Shock
N 3E651 Steering stabilizer

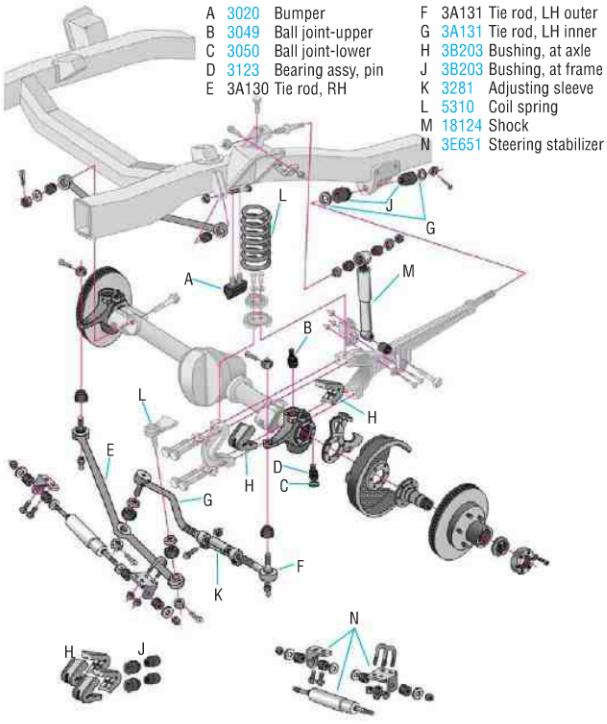

1976–1977

76-77	Bumper, front axle, on frame, 2 reqd	F-3020-5	10.00
76-77	Ball joint, upper	F-3049-1	41.95
76-77	Ball joint, lower, heavy duty	F-3050-1A	37.80
76-77	Bearing assy, king pin, on spindle	F-3123-5	9.15
76-77	Tie rod, LH inner, 7.80"	F-3A131-24B	40.50
76-77	Bushing retainer, radius arm front	F-3B186-1	5.83
76-77	Insulator, front radius arm at axle, 4 reqd	F-3B203-1	6.50
76-77	Bushing set, front radius arm at frame, improved design	F-3B203-13	28.15
76-77	Bushing set, front radius arm at frame, improved HD design	F-3B203-13A	40.45
76-77	Oil seal, front axle shaft, inner, w/Dana 44 FA	F-3254-3	13.10
76-77	Adjusting sleeve assy, tie rod, 4.50"	F-3281-3	18.70

Order toll free 24 hrs a day, 7 days a week!

Michigan Depot local 734-397-4683, tollfree 800-521-6104

We proudly feature quality products from: MOOG CHASSIS PARTS

Items in blue-check listings for applications.

A 3020 Bumper
B 3049 Ball joint-upper
C 3050 Ball joint-lower
D 3123 Bearing assy, pin
E 3A130 Tie rod, RH
F 3A131 Tie rod, LH outer
G 3B203 Bushing, at axle
H 3B203 Bushing, at frame
J 3281 Adjusting sleeve
K 3304 Drag Link
L 5310 Coil spring

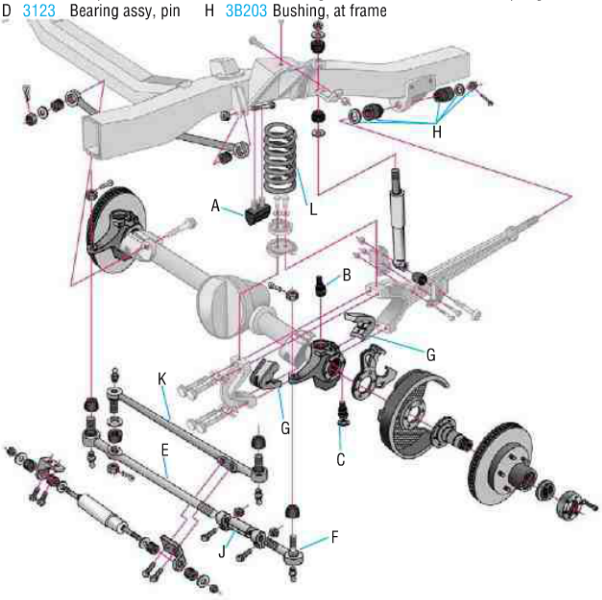

1978–1979

78-79	Bumper, front axle, on frame, 2 reqd	F-3020-6	19.95
78-79	Ball joint, upper	F-3049-1	41.95
78-79	Ball joint, lower, heavy duty	F-3050-1A	37.80
78-79	Bearing assy, king pin, on spindle	F-3123-5	9.15
78-79	Tie rod, RH outer, 49.56"	F-3A130-11A	102.50
78-79	Tie rod, RH assembly, 42.03"	F-3304-7	130.95
78-79	Tie rod, LH outer, 4.75"	F-3A131-11	73.24
78-79	Bushing retainer, radius arm front	F-3B186-1	5.83
78-79	Oil seal, front axle shaft, w/Dana 44 FA	F-3254-4	20.80
78-79	Insulator, front radius arm at axle, 4 reqd	F-3B203-1	6.50
78-79	Bushing set, front radius arm at frame, improved design	F-3B203-19	40.30
78-79	Bushing set, front radius arm at frame, improved HD design	F-3B203-13A	40.45
78-79	Adjusting sleeve assy, tie rod, 5.50"	F-3281-7	36.70

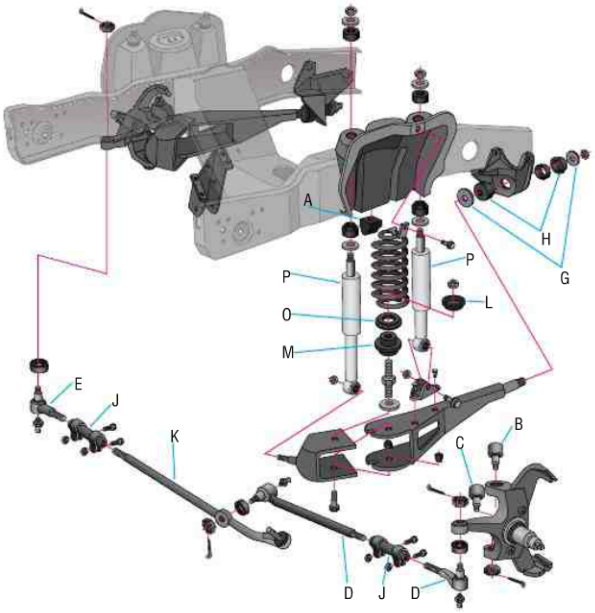

A 3020 Bumper, suspension
B 3049 Ball joint, upper
C 3050 Ball joint, lower
D 3A130 Tie rod
E 3A131 Tie rod
F 3B177 Bushing, axle pivot
G 3B186 Retainer, radius arm bushing
H 3B203 Bushing, radius arm
J 3281 Adjusting sleeve, tie rod
K 3304 Drag link
L 5B300 Retainer, front spring
M 5A307 Seat, coil spring
N 5310 Coil spring
O 5415 Insulator, coil spring
P 18124 Shock
Q 87922 Grease zerk fitting
Items in blue-check listings for applications.

1980–5/2/1982

80-82	Ball joint, upper, heavy duty	F-3049-6	44.95
80-82	Ball joint, lower, heavy duty	F-3050-1A	37.80
80-82	Bearing assy, king pin, on spindle	F-3123-5	9.15
80-82	Tie rod, RH outer, 5.37", 22mm thd	F-3A130-5A	54.95
80-82	Tie rod, RH inner drag link, 34.00", 22mm thd	F-3A130-5B	39.25
80-82	Tie rod, LH outer, 5.37", 20mm thd	F-3A131-5A	54.95
80-82	Tie rod, LH inner, 17.49", 20mm thd	F-3A131-6B	67.95
80-82	Bushing, axle pivot	F-3B177-6	14.15
80-82	Bushing retainer, radius arm front	F-3B186-1	5.83
80-81	Bushing set, front radius arm at frame, (b4 11/80), improved design	F-3B203-20	33.50
80-82	Bushing set, front radius arm at frame, improved HD design	F-3B203-20A	33.30
81-82	Bushing set, front radius arm at frame, (from 11/80), HD design with adjustable eccentric for added camber adjustment, per side	F-3B203-20B	15.70
80-82	Oil seal, front axle shaft, RH, inner, w/Dana 44 FA	F-3254-5A	11.00
80-82	Oil seal, front axle shaft, LH, inner, w/Dana 44 FA	F-3254-5B	12.95
80-82	Adjusting sleeve assy, tie rod, RH, 5.00"	F-3281-4	23.35
80-82	Adjusting sleeve assy, tie rod, LH, 5.00"	F-3281-5	25.80
80-82	Pitman arm, P/S	F-3590-19	96.95

TOLL-FREE ORDER LINES

OPEN 24 HOURS 7 DAYS

VISA MasterCard DISCOVER AMERICAN EXPRESS WESTERN UNION QuickCollect

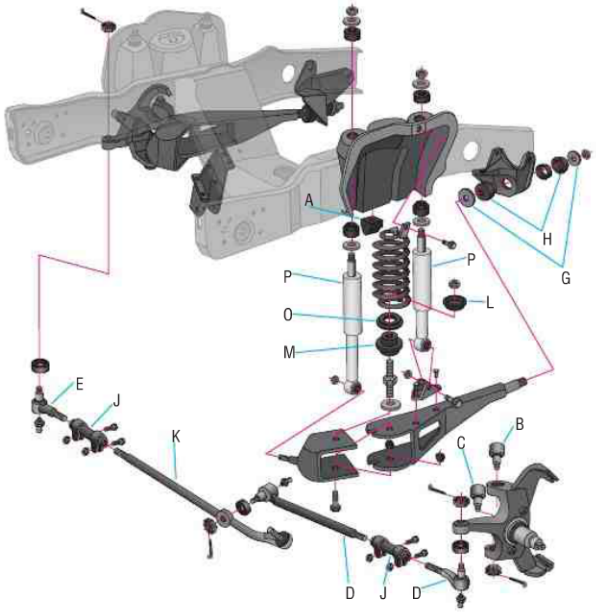

A 3020 Bumper, suspension
B 3049 Ball joint, upper
C 3050 Ball joint, lower
D 3A130 Tie rod
E 3A131 Tie rod
F 3B177 Bushing, axle pivot
G 3B186 Retainer, radius arm bushing
H 3B203 Bushing, radius arm
J 3281 Adjusting sleeve, tie rod
K 3304 Drag link
L 5B300 Retainer, front spring
M 5A307 Seat, coil spring
N 5310 Coil spring
O 5415 Insulator, coil spring
P 18124 Shock
Q 87922 Grease zerk fitting
Items in blue-check listings for applications.

5/3/1982–4/30/1985

83-85	Bumper, front axle, 2 reqd	F-3020-12	11.95
82-85	Ball joint, upper, heavy duty	F-3049-6	44.95
82-85	Ball joint, lower, heavy duty	F-3050-1A	37.80
82-85	Bearing assy, king pin, on spindle	F-3123-5	9.15
82-85	Tie rod, RH outer, 5.37", 22mm thd	F-3A130-5A	54.95
82-85	Tie rod, RH inner drag link, 33.65", 22mm thd	F-3A130-6B	118.50
82-85	Tie rod, LH outer, 5.37", 20mm thd	F-3A131-5A	54.95
82-85	Tie rod, LH inner, 17.49", 20mm thd	F-3A131-6B	67.95
82-85	Bushing, axle pivot	F-3B177-6	14.15
82-85	Bushing retainer, radius arm front	F-3B186-1	5.83
82-85	Bushing set, front radius arm at frame, improved design	F-3B203-17	33.85
82-85	Bushing set, front radius arm at frame, improved HD design	F-3B203-20A	33.30
82-85	Bushing set, front radius arm at frame, HD design with adjustable eccentric for added camber adjustment, per side	F-3B203-20B	15.70
82-85	Oil seal, front axle shaft, RH, inner, w/Dana 44 FA	F-3254-5A	11.00
82-85	Oil seal, front axle shaft, LH, inner, w/Dana 44 FA	F-3254-5B	12.95
82-85	Adjusting sleeve assy, tie rod, RH, 5.00"	F-3281-4	23.35
82-85	Adjusting sleeve assy, tie rod, LH, 5.00"	F-3281-5	25.80
82-85	Pitman arm, P/S	F-3590-19	96.95

TOLL-FREE ORDER LINES



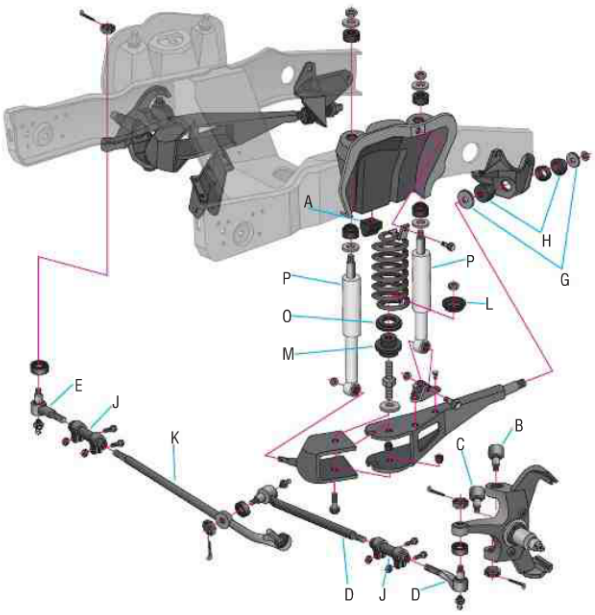

A 3020 Bumper, suspension
B 3049 Ball joint, upper
C 3050 Ball joint, lower
D 3A130 Tie rod
E 3A131 Tie rod
F 3B177 Bushing, axle pivot
G 3B186 Retainer, radius arm bushing
H 3B203 Bushing, radius arm
J 3281 Adjusting sleeve, tie rod
K 3304 Drag link
L 5B300 Retainer, front spring
M 5A307 Seat, coil spring
N 5310 Coil spring
O 5415 Insulator, coil spring
P 18124 Shock
Q 87922 Grease zerk fitting
Items in blue-check listings for applications.

5/1985–1996

85-96	Bumper, front axle, 2 reqd	F-3020-12	11.95
85-96	Ball joint, upper, heavy duty	F-3049-6	44.95
85-96	Ball joint, lower, heavy duty	F-3050-1A	37.80
85-89	Bearing assy, king pin, on spindle	F-3123-5	9.15
85-96	Tie rod, RH outer, 5.10", 22mm thd	F-3A130-6A	21.50
85-96	Tie rod, RH inner drag link, 33.65", 22mm thd	F-3A130-6B	118.50
85-96	Tie rod, LH outer, 5.51", 20mm thd	F-3A131-6A	21.50
85-96	Tie rod, LH inner, 17.49", 20mm thd	F-3A131-6B	67.95
85-96	Bushing, axle pivot	F-3B177-6	14.15
85-92	Bushing retainer, radius arm front, (b4 1/13/92), 2 reqd	F-3B186-1	5.83
92-96	Bushing retainer, radius arm front, (from 1/13/92), RH	F-3B186-1	5.83
92-96	Bushing retainer, radius arm front, (from 1/13/92), LH	F-3B186-2	5.83
85-86	Bushing set, front radius arm at frame, improved design	F-3B203-17	33.85
85-86	Bushing set, front radius arm at frame, improved HD design	F-3B203-20A	33.30
85-86	Bushing set, front radius arm at frame, HD design with adjustable eccentric for added camber adjustment, per side	F-3B203-20B	15.70
87-96	Bushing set, front radius arm at frame	F-3B203-18	37.50
87-96	Bushing set, front radius arm at frame, improved HD design	F-3B203-18A	43.40
87-96	Bushing set, front radius arm at frame, HD design with adjustable eccentric for added camber adjustment, per side	F-3B203-18B	17.30
85-96	Oil seal, front axle shaft, RH, inner, w/Dana 44 FA	F-3254-5A	11.00
85-96	Oil seal, front axle shaft, LH, inner, w/Dana 44 FA	F-3254-5B	12.95
85-96	Adjusting sleeve assy, tie rod, RH, 5.00"	F-3281-4	23.35
85-96	Adjusting sleeve assy, tie rod, LH, 5.00"	F-3281-5	25.80
85-96	Pitman arm, P/S	F-3590-19	96.95

Order toll free 24 hrs a day, 7 days a week!

Michigan Depot local 734-397-4683, tollfree 800-521-6104

FRONT AXLE



3B094/5 BRACKET, Radius Arm

Replace rusted, bent or weakened originals with these top quality replacements by Federal-Mogul.

87-96		F-3B094-1	49.75
87-96		F-3B095-1	49.75



3020 BUMPER, Axle

See also groups 4730, 5460, and 5783. Sold each, usually 2 are reqd.

66-77	Front axle	F-3020-5	10.00
NEW! 78-79	Front or rear axle, 4 reqd	F-3020-4	14.95
83-96	Front axle	F-3020-12	11.95



3B186 BUSHING RETAINER, Radius Arm Front

Unless noted otherwise 2 pcs. are required.

66-92	(b4 1/13/92)	F-3B186-1	5.83



Grease Fittings (zerks)

Used throughout the suspension. See tool section for handy zerk tool 987-4 and -8.

1/4"-28 npt straight

	Zinc plated	87922-S41A	0.48
	Chrome	87922-S41C	0.75

1/4"-28 npt 135°

	Zinc plated	87922-S42A	0.75
	Chrome	87922-S42C	0.75

1/8" npt straight

	Zinc plated	87922-S81A	0.64
	Chrome	87922-S81C	0.99
	Stainless steel	87922-S81S	2.00

1/8" npt 90°

	Zinc plated	87922-S82A	0.75
	Chrome	87922-S82C	0.99

TF =Truck Freight, OS =UPS Oversize.
See shipping information on inside back cover.

ENERGY SUSPENSION



3B177 POLYURETHANE BUSHING KIT, Axle Pivot

Unique 2 durometer bushings. Firm in center, soft on the outside to allow flex when needed. Includes thrust washers. Allows full axle travel without binding or tearing. Must be used with outer metal shell from original bushing. Add color code in parenthesis to end of item number: black (A), red (C) for example F-3B177-9A.

80-96	4x4	F-3B177-8_	27.50

ENERGY SUSPENSION



3B203 POLYURETHANE INSULATOR, Front Radius Arm at Axle

Rubber bushings do not provide the correct geometry for coil spring trucks with lift equipment. This improper alignment causes control problems associated with road wander. These insulators are available in 2, 4, & 7 degree positive caster for stock and raised suspensions. Kits include 4 pcs. and are molded in your choice of 2 colors! Add color code in parenthesis to end of item number: black (A), red (C) for example F-3B203-2A.

66-79	4x4, 2°, stock to 2" lifts	F-3B203-2_	33.95
66-79	4x4, 4°, 2-4" lifts	F-3B203-4_	33.95
66-79	4x4, 7°, lifts over 4"	F-3B203-7_	33.95

ENERGY SUSPENSION



3B203 POLYURETHANE BUSHING KIT, Front Radius Arm at Frame

Add color code in parenthesis to end of item number: black (A), red (C), for example F-3B203-15A

66-79		F-3B203-15_	16.95
80-92	(b4 2/92)	F-3B203-16_	19.50
92-96	(from 2/92)	F-3B203-14_	19.50

3B203 POLYURETHANE BUSHING & INSULATOR KIT, Front Radius Arm

This kit combines axle pivot and radius arm bushings and insulators into one convenient kit. Includes the radius arm bushings, radius arm "C" insulators in 2, 4, or 7 degrees, and the round track arm bushings, all in your choice of 2 colors. For colors add the code in parenthesis to the end of the item number below: black (AK) red (CK), example F-3B203-2AK for black.

66-79	4x4, 2° offset, 0-2" lift	F-3B203-2__	33.95
66-79	4x4, 4° offset, 2-4" lifts	F-3B203-4__	33.95
66-79	4x4, 7° offset, lifts over 4"	F-3B203-7__	33.95







3B203 INSULATOR, Front Radius Arm at Axle

66-77	Improved design	F-3B203-13	28.15
66-79	Improved HD design	F-3B203-13A	40.45
78-79	Improved design	F-3B203-19	40.30
80-81	(b4 11/80), improved design	F-3B203-20	33.50
80-86	Imp'd HD design	F-3B203-20A	33.30
81-86	(from 11/80), HD design with adjustable eccentric for added camber adjustment, per side	F-3B203-20B	15.70
82-86	Improved design	F-3B203-17	33.85
87-96		F-3B203-18	37.50
87-96	Improved HD design	F-3B203-18A	43.40
87-96	HD design with adjustable eccentric for added camber adjustment, per side	F-3B203-18B	17.30



3249 U-JOINT, Front Axle Shaft

See U-joint charts in Front axle section for complete U-joint listings.



3254 OIL SEAL, Front Axle Shaft

66	(from 3/17/66)	F-3254-7	6.70
67-71	(b4 71 ser#K20,001), w/Dana 30 FA	F-3254-2	8.20
71-77	(from 71 ser#K20,001), w/Dana 44 FA	F-3254-3	13.10
78-79	W/Dana 44 FA	F-3254-4	20.80
80-96	RH, inner, w/Dana 44 FA	F-3254-5A	11.00
80-96	LH, inner, w/Dana 44 FA	F-3254-5B	12.95



5A586 AIR SPRING KITS by Airlift

Custom tune your trucks ride, 100% air adjustable, 1000# or 2500# load leveling capacity. Excellent for snow plows or winches. Eliminates poor braking, unsafe cornering or steering. Restores lost load capacity from weak springs.

80-96 Front F-5A586-1A 118.50
80-96 Rear, 2500# capacity F-5A586-4A 301.95



F-5A5871 F-5A587-2

Single stage Load Controller II. Inflates both air springs with equal pressure. Comes with a low pressure sensor to maintain pressure at a safe minimum level. Conveniently adjust the air pressure from your cab. Includes 12 volt compressor, gauge with panel and inflate/deflate controls, all electrical connections, air lines, fittings and detailed instructions. See interior section for A pillar gauge pods to mount the air pressure gauge.

80-96 Single controller F-5A587-1 229.95
80-96 Dual controller F-5A587-2 331.95

FRONT SPRING



F-5B300-4 F-5A307-1

5B300 RETAINER, Front Spring Mounting

Upper

66-72 2 reqd, repro F-5B300-7 4.95
66-72 2 reqd, polished stainless steel, repro F-5B300-7B 6.95
73-77 2 reqd, replacement style F-5B300-7 4.95
73-77 2 reqd, replacement style, polished stainless steel F-5B300-7B 6.95
80-96 Upper, 2 reqd F-5B300-2 9.98

Lower

66-72 2 reqd, repro F-5B300-4 19.95
66-72 2 reqd, polished stainless steel, repro F-5B300-4B 26.95
73-77 2 reqd, replacement style, repro F-5B300-4 19.95
73-77 2 reqd, replacement, polished stainless steel F-5B300-4B 26.95
78-79 Lower, 2 reqd F-5B300-6 24.95
80-96 Lower, 2 reqd F-5B300-3 15.00

5A307 SEAT, Front Coil Spring

66-70 Replacement, RH or LH side .. F-5A307-1 29.95
66-70 Replacement, polished stainless steel, RH or LH side F-5A307-1B 29.95
71-77 RH or LH side, repro F-5A307-1 29.95
71-77 Polished stainless steel, RH or LH side F-5A307-1B 29.95
78-79 ..... F-5A307-2 29.95



5310 COIL SPRINGS, Front Suspension

Coil springs are sold in pairs. See chart on the following pages for application listings.



5415 INSULATOR, Coil Spring

82-91 2 reqd, lower F-5415-2 10.40

REAR SPRING

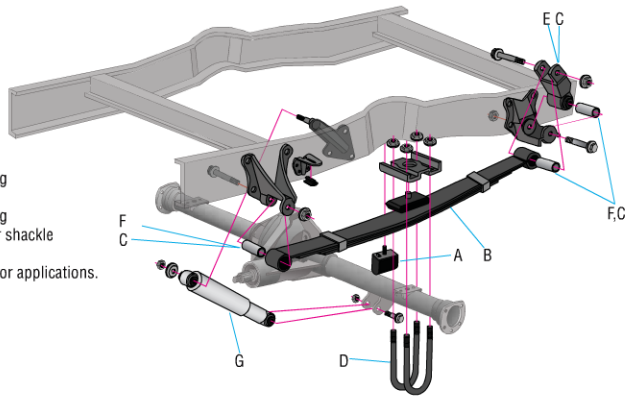

A 4730 Bumper, axle
B 5560 Leaf spring
C 5630 Shackle, leaf spring
D 5705 U-bolt, leaf spring
E 5776 Shackle, leaf spring
F 5781 Bushing, spring or shackle
G 18125 Shock absorber
Items in blue-check listings for applications.

5310 Front Coil Spring Table

Year	Application Information	Regular	HD	W/A/C Regular	W/A/C HD
66-77	All	N/A	F-5310-4	N/A	F-5310-4
78-79	All	F-5310-5	F-5310-10	F-5310-5	F-5310-10
80-89	All, excl dual shock option	F-5310-6	F-5310-7	F-5310-6	F-5310-7
90-96	5.0l	F-5310-6	F-5310-7	F-5310-6	F-5310-7
90-96	5.0l optional HD, 5.8l all	F-5310-7	F-5310-7	F-5310-7	F-5310-7

COIL SPRING PRICING (per pair)

F-5310-4 ..... 72.95
F-5310-5 ..... 91.95
F-5310-6 ..... 89.95
F-5310-7 ..... 91.50
F-5310-10 ..... 99.95

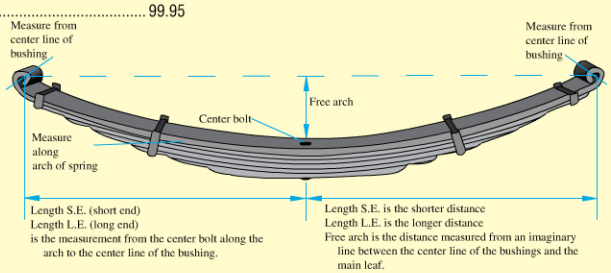

Length S.E. (short end)
Length L.E. (long end)
is the measurement from the center bolt along the arch to the center line of the bushing.

Length S.E. is the shorter distance
Length L.E. is the longer distance
Free arch is the distance measured from an imaginary line between the center line of the bushings and the main leaf.

5560 Rear Leaf Spring Table

Type	Year	Application Information	Leaf width	# of leafs	Length S.E.	Length L.E.	Free Arch	Part number	Price each
BRONCO	66-77	930# load	2 1/4"	4/1	24"	24"	8 1/8"	F-5560-113	299.95
BRONCO	66-77	1280# load, 2 stage	2 1/4"	5/1	24"	24"	6 5/8"	F-5560-115	269.95
BRONCO	78-84	Code Y, 1390# load	3"	5	25"	31"	5 7/8"	F-5560-116	299.95
BRONCO	78-93	Code Z, 1650# load, 202/276# rate	3"	4/1	25"	31"	6 1/2"	F-5560-109	312.95
BRONCO	94-96	Code D, 1650# load, 230# rate	3"	4/1	25"	31"	6 1/2"	F-5560-109	312.95



5560 LEAF SPRING, Rear Axle

See appropriate chart below for applications and item numbers. Leaf springs are priced individually, however we strongly recommend that leaf springs be replaced only in pairs.

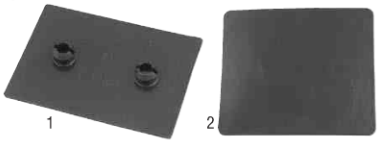

5586 ANTI-SQUEAK PAD, Leaf Spring

73-77	1 reqd per spring	F-5586-1	0.99
78-96	4 reqd	F-5586-2	10.00



5630 SHACKLE KIT, Rear Leaf Spring

Unless noted otherwise 2 kits are required.

NEW!	66-69	Front or rear, 4 reqd, OE	F-5630-17	39.95
	66-69	Front or rear, 4 reqd, repro	F-5630-14	24.00
	70-77	Front or rear, 4 reqd	F-5630-15	29.95
	78-79	Front	F-5630-16	12.00
	80-96	Rear shackle	F-5630-11	112.18



5630 POLYURETHANE SHACKLE KIT, Rear Leaf Spring

Available in your choice of two colors! Add color code in parenthesis to end of item number: black (A), red (C); for example; F-5630-30A.

66-77	Rear shackle	F-5630-33_	42.50
78-79	Rear shackle	F-5630-34_	42.50
80-96	Rear shackle, w/common frame bushing	F-5630-40_	42.50

TF =Truck Freight, OS =UPS Oversize.
See shipping information on inside back cover.



5776 SHACKLE, Rear Spring

2 pieces are required. Rear position.

78-79		F-5776-8	148.67
80-96	Includes bushing	F-5776-12	40.44



5781 BUSHING, Rear Spring or Shackle

66-69	Spring, 2 reqd	F-5781-4	8.00
70-77	Spring, front or rear, 2 reqd	F-5781-6	6.95
73-77	Shackle, 1 reqd	F-5781-3	7.95
78-79	Shackle, 1 reqd	F-5781-8	14.22
78-79	Spring, front, 1 reqd	F-5781-9	39.95
78-79	Spring, rear 1 reqd	F-5781-8	14.22
80-96	Shackle, 2 reqd	F-5781-13	16.98
80-89	Spring, front or rear	F-5781-16	16.95
90-96	Spring, front, 2 reqd	F-5781-18	26.95
90-96	Spring, rear, 2 reqd	F-5781-13	16.98

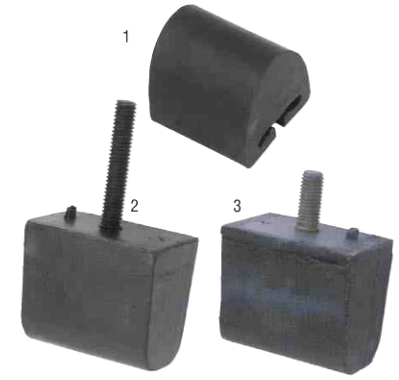

4730/5783 BUMPER, Axle

2 pieces are required.

66-77	On frame	F-4730-1	9.95
78-79	On front or rear axle	F-4730-2	19.95
80-96		F-4730-3	9.98





SHOCKS/SHOCK PARTS



SHOCK ABSORBERS, Replacement Style

Shocks are sold each. Shocks listed as "premium gas" and "HD premium gas" are for stock vehicles without lift kits. Shocks are organized by year and then by front or rear. Shocks listed below are manufactured by Gabriel with a private brand label.

Premium nitrogen charged gas shocks are custom tuned for excellent control and handling. An upgrade from stock OE gas shocks.

HD premium gas shocks (a.k.a. "Terrain Tamer" shocks) provide a more comfortable ride under normal driving conditions plus instant control under extreme driving conditions through velocity sensitive technology built into the valving of the shock. A significant upgrade over OE shock. Computer designed for light trucks and 4x4's. Custom tuned valving and nitrogen gas charged for improved ride. Bulged profile and 1 3/8" piston for improved handling and control by increased fluid content and larger valve surface to control motion.

Front quad shocks are listed as front for the front shock position (forward most shock position) and rear for the Front shock group rear position.

4 Wheel Drive (4x4)

Year	Shock type & application	Front	Rear
66	Premium gas, (b4 ser#830,000)	F-18124-4A	F-18125-4A
66	HD premium gas, (b4 ser#830,000)	F-18124-4B	F-18125-4B
66-77	Premium gas, (from 66 ser#830,001)	F-18124-4A	F-18125-3A
66-77	HD premium gas, (from 66 ser#830,001)	F-18124-4B	F-18125-3B
78-79	HD premium gas, excl quad shocks		
	Front/LH	F-18124-12B	
	Front/RH	F-18124-10B	
	Rear		F-18125-3B
78-79	HD premium gas, quad shocks		
	Front position	F-18124-12B	
	Rear position	F-18124-10B	
	Rear		F-18125-3B
80-96	HD premium gas, excl quad shocks	F-18124-5B	F-18125-5B
80-96	HD premium gas, quad shocks		
	Front position	F-18124-13B	
	Rear position	F-18124-5B	
	Rear		F-18125-5B

Try our KYB high and low pressure gas charged shocks for improved response and ride control. KYB listings can be found in the next column.

Replacement Shock Pricing

Front shocks		Rear shocks	
F-18124-4A	36.25	F-18125-3A	31.50
F-18124-4B	60.50	F-18125-3B	66.95
F-18124-5B	54.50	F-18125-4A	38.25
F-18124-10B	66.95	F-18125-4B	61.25
F-18124-12B	62.50	F-18125-5B	62.25
F-18124-13B	63.95		

KYB Shock Pricing

Front shocks		Rear shocks	
F-18124-4G	33.95	F-18125-3G	38.95
F-18124-4J	49.95	F-18125-3J	48.95
F-18124-5G	31.95	F-18125-4G	31.95
F-18124-5J	48.95	F-18125-4J	50.95
F-18124-13G	36.95	F-18125-5G	25.95
F-18124-13J	51.95	F-18125-5J	50.95
		F-18125-11G	33.95
		F-18125-11J	50.95



SHOCK, KYB

GR-2, Low-pressure nitrogen gas charged. Designed to deliver a smooth comfortable ride. A patented check valve minimizes foaming and aeration to make sure the ride stays smooth, even under rough conditions.

GAS-A-JUST, (GAJ) High-pressure nitrogen gas charged. Designed to deliver maximum driving control and performance. Higher pressure keeps tires glued to the road while its high strength mono-tube configuration provides extra-rugged durability and fade-free performance.

Front quad shocks are listed as front for the front shock position (forward most shock position) and rear for the Front shock group rear position.

GR-2 from $25.95 & Gas-A-Just from $50.95 each

		Front	Rear
66	GR-2, (b4 ser#830,000)	-	F-18125-4G
66	GAJ, (b4 ser#830,000)	-	F-18125-4J
66-77	GR-2, (from 66 ser#830,000)	F-18124-4G	F-18125-3G
66-77	GAJ, (from 66 ser#830,000)	F-18124-4J	F-18125-3J
80-83	GR-2, w/o front quad shocks	F-18124-5G	F-18125-5G
80-83	GAJ, w/o front quad shocks	F-18124-5J	F-18125-5J
80-83	GR-2, w/quad shocks,		
	front position	F-18124-13G	
	rear position	F-18124-5G	
	rear		F-18125-5G
80-83	GAJ, w/quad shocks		
	front position	F-18124-13J	
	rear position	F-18124-5J	
	rear		F-18125-5J
84-96	GR-2, w/o front quad shocks	F-18124-5G	F-18125-11G
84-96	GAJ, w/o front quad shocks	F-18124-5J	F-18125-11J
84-96	GR-2, w/quad shocks		
	front position	F-18124-13G	
	rear position	F-18124-5G	
	rear		F-18125-11G
84-96	GAJ, w/quad shocks		
	front position	F-18124-13J	
	rear position	F-18124-5J	
	rear		F-18125-11J

PERFORMANCE STABILIZER BARS

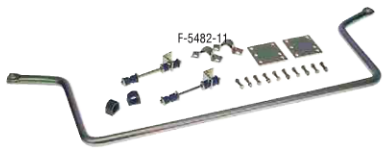

5482 STABILIZER BAR KITS, Improved Handling Front

ALL kits contain polyurethane bushings and insulators, and all required brackets and end links are zinc plated for corrosion resistance. UPS oversize

66-77	7/8" dia. bar	F-5482-15	159.46
78-79	1" dia. bar	F-5482-9	168.11
80-96	1 1/8" dia. bar	F-5482-11	192.26

TF =Truck Freight, OS =UPS Oversize.
See shipping information on inside back cover.

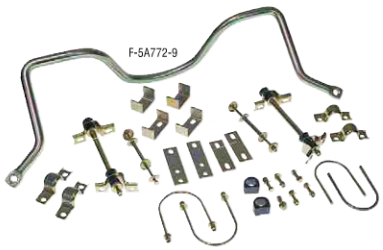

5A772 STABILIZER BAR KITS, Improved Handling Rear

Use in conjunction with 5482 Improved Handling Front Stabilizer Bar Kits. UPS oversize.

66-77	3/4" dia. bar	F-5A772-16	166.32
78-96	1" dia. bar	F-5A772-9	168.11

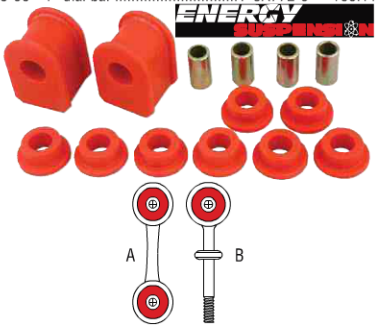

5493 POLYURETHANE INSULATOR KIT, Front Stabilizer Bar

Kits for "B" style links contain: 2 bar bushings for existing brackets, 4 bushings, 2 sleeves for eye end, and 4 grommets for end links. Kits for "A" style links contain: 2 main frame bushings, 8 bushings, and 4 sleeves for link eyes. In your choice of two colors! Add color code in parenthesis to end of item number: black (A), red (C) for example F-5493-20A.

77-96	Style "A", for 7/8" dia. bar	F-5493-23_	21.25
77-96	Style "A", for 1" dia. bar	F-5493-24_	21.25
77-96	Style "A", for 1 1/8" dia. bar	F-5493-25_	21.25
75-96	Style "B", for 7/8" dia. bars	F-5493-20_	21.25
75-96	Style "B", for 1" dia. bar	F-5493-21_	21.25
75-96	Style "B", for 1 1/8" dia. bar	F-5493-22_	21.25

5493 POLYURETHANE INSULATOR KIT, Rear Stabilizer Bar

Kits for "A" style links contain: 2 bar bushings for existing brackets, 4 bushings, 2 sleeves for eye ends and 4 grommets for threaded end. Kits for "A" style links contain: 2 main frame bushings, 8 bushings, 4 sleeves for link eyes. Available in your choice of two colors! Add color code in parenthesis to end of item number: black (A), red (C); for example F-5493-27A.

70-96	Style "A", for 5/8" dia. bar	F-5493-31_	20.25
70-96	Style "A", for 3/4" dia. bar	F-5493-32_	20.25
70-96	Style "A", for 7/8" dia. bar	F-5493-33_	20.25
70-96	Style "A", for 1" dia. bar	F-5493-34_	20.25
70-96	Style "A", for 1 1/8" dia. bar	F-5493-42_	20.25
70-96	Style "B", for 5/8" dia. bar	F-5493-27_	24.25
70-96	Style "B", for 3/4" dia. bar	F-5493-28_	20.25
70-96	Style "B", for 7/8" dia. bar	F-5493-29_	20.25
70-96	Style "B", for 1" dia. bar	F-5493-30_	20.25
70-96	Style "B", for 1 1/8" dia. bar	F-5493-41_	20.25

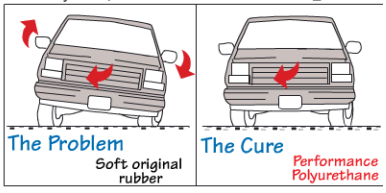

FRONT STABILIZER BAR

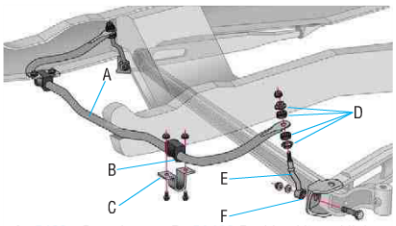

A 5482 Sway bar
B 5493 Bushing
C 5486 Bracket
D 5A486 Bushing kit, end link
E 5K483 End link, sway bar
F 5781 Bushing, end link
Items in blue-check listings for applications.

5482 STABILIZER BAR, Original Front

80-96 **OS** F-5482-2 200.00



5K483 LINK ASSY, Front Stabilizer Bar

Unless noted otherwise 2 pieces are required per truck.

80-96 RH, 1 reqd F-5K483-6B 31.65
80-96 LH, 1 reqd F-5K483-6A 28.32



5486 BRACKET, Stabilizer Bar

Unless otherwise noted 1 piece is required.

78-79 Front axle, to attach bar to axle bracket, 2 reqd F-5486-4 9.98
80 Front axle, bracket-bar to frame, 2 reqd F-5486-11 33.32
80 Front axle, retainer-bar to frame, 2 reqd F-5486-4 9.98
81-86 Front, excl snow plow pkg. and HD susp., retainer-bar to frame, 2 reqd F-5486-4 9.98
90-91 Front axle, retainer-bar to frame, 2 reqd F-5486-4 9.98
90-91 Front axle, bracket-bar to frame, 2 reqd F-5486-11 33.32
92-96 Front axle, retainer-bar to frame, 2 reqd F-5486-4 9.98
90-96 Rear, bracket F-5486-15 10.00



5A486 END LINK REPAIR KIT, Front Stabilizer Bar

2 kits are required per truck.

73-94 ..... F-5A486-1 13.50
95-96 ..... F-5A486-2 27.98

5493 INSULATOR, Front Stabilizer Bar

Unless noted otherwise 2 pieces are required.

76-77 Pair, 1 1/16", HD thermoplastic F-5493-18 16.30
76-77 At frame mount, rubber F-5493-3 11.65
78-79 ..... F-5493-3 11.65
80-96 ..... F-5493-5 6.66

REAR STABILIZER BAR

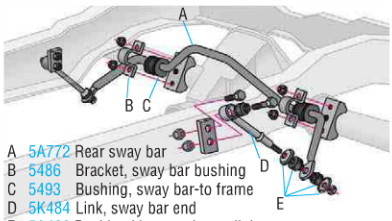

A 5A772 Rear sway bar
B 5486 Bracket, sway bar bushing
C 5493 Bushing, sway bar-to frame
D 5K484 Link, sway bar end
E 5A486 Bushing kit, sway bar to link
Items in blue-check listings for applications.



5K484 LINK ASSY, Rear Stabilizer Bar

Unless noted otherwise 2 pieces are required.

80-96 ..... F-5K484-7 21.65



5493 INSULATOR, Rear Stabilizer Bar

Unless noted otherwise 2 pieces are required.

80-82 W/Ford 9" RA F-5493-13 13.83
83-89 W/Ford 8.8" RA F-5493-11 43.33

Aftermarket replacement style made from high performance thermoplastic material, pairs:

80-96 Rear, 7/8" bar F-5493-20 15.60
80-96 Rear, 1 1/8" bar F-5493-19 16.45

5A772 BAR ASSY, Original Rear Stabilizer

80-96 **OS** F-5A772-1 141.43

TRACK BAR

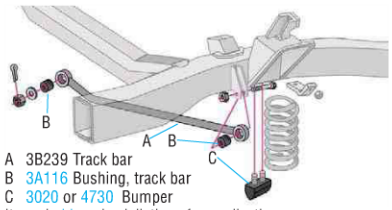

A 3B239 Track bar
B 3A116 Bushing, track bar
C 3020 or 4730 Bumper
Items in blue-check listings for applications.



3A116 BUSHING, Track Bar

66-79 RH, axle end F-3A116-2 13.14
66-79 LH, frame end ..... F-3A116-1 CALL

3A116 POLYURETHANE BUSHING KIT, Track Bar

Available in your choice of two colors! Add color code in parenthesis to end of item number: black (A), red (C); for example F-3A116-4A. Pair.

66-79 Round style, excl 76-77 ..... F-3A116-4_ 9.75
76-77 Oval style ..... F-3A116-5_ 10.95

See "AXLE" section for front and rear axle and differential parts.

STEERING SECTION INFORMATION

Front steering .....pg 41
Steering shaft/column pg 44
P/S pump.....pg 45
Steering stabilizer ....pg 46
Steering wheel..... pg 42
Steering gear/box ..... pg 45
P/S hoses/lines ..... pg 46

Some abbreviations found in this section (alphabetical-read across):

chrg .. charge (core charge)
DPC .... Dual piston caliper
excl.....excluding
GVW.. Gross vehicle weight
incl ..... includes
LH ..... drivers side
mm.....millimeter
OE Original equipment style
RA .....Rear axle
reqd ..... Required
RH.....passenger side
SRW.....Single rear wheel
W/o.....Used without
dia. .....diameter
DRW..... Dual rear wheels
FA..... Front axle
HD ..... Heavy duty
l .. litre (metric engine size)
MB .....manual brakes
M/T ... Manual transmission
pc (s) ..... Piece (s)
Repl'mt .....Replacement
reqs.....Requires
ser#.....serial number
w/ .....Used with
WB ..... Wheel base
 # pounds-when used following a number (8500#= 8500 pounds)

A complete listing of abbreviations may be found at the rear of this catalog

FRONT STEERING



3049 BALL JOINT ASSY, Upper

66-79 ..... F-3049-1 41.95
80-96 Heavy duty F-3049-6 44.95



3050 BALL JOINT ASSY, Lower

66-96 Heavy duty F-3050-1A 37.80

TF =Truck Freight, OS =UPS Oversize.
See shipping information on inside back cover.

See the "Axle" section for a complete listing of bearings on the front axle



3123 BEARING ASSY, Spindle

Unless noted otherwise 2 pcs. are required.

66-71	On spindle bolt	F-3123-3	18.85
66-89	On spindle	F-3123-5	9.15



3123 BEARING ASSY, Spindle

Unless noted otherwise 4 pcs. are required.

66-72	Dana 30, 44	F-3123-5	9.15
73-96	Dana 44, inner	F-3123-5	9.15

3126 BEARING RACE, Spindle

Unless noted otherwise 4 pcs. are required.

66-71	(b4 71 ser#K20,001)	F-3126-1	7.50



3171 GREASE SEAL, King Pin Bearing

66-71	(b4 71 ser#K20,001), 4 reqd.	F-3171-1	5.80

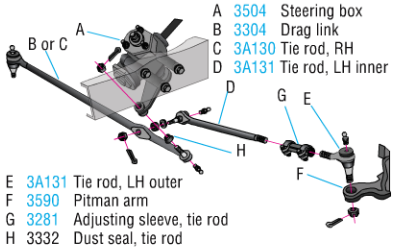

A 3504 Steering box
B 3304 Drag link
C 3A130 Tie rod, RH
D 3A131 Tie rod, LH inner
E 3A131 Tie rod, LH outer
F 3590 Pitman arm
G 3281 Adjusting sleeve, tie rod
H 3332 Dust seal, tie rod

3A130 TIE ROD END, Right Hand Side

66-75	Outer, 5.20"	F-3A130-8	58.25
78-79	Outer, 49.56"	F-3A130-11A	102.50
80-85	(b4 5/85), outer, 5.37", 22mm thread	F-3A130-5A	54.95
85-96	(from 5/85), outer, 5.10", 22mm thread, standard	F-3A130-6A	21.50
80-82	(b4 5/3/82), inner drag link, 33.65", 22mm thread	F-3A130-5B	39.25
82-96	(from 5/3/82), inner drag link, 33.65", 22mm thread	F-3A130-6B	118.50

3A131 TIE ROD END, Left Hand Side

66-75	Outer, 41.80"	F-3A131-23	161.95
76-77	Inner, 7.80"	F-3A131-24B	40.50
78-79	Outer, 4.75"	F-3A131-11	73.24
80-85	(b4 5/85), outer, 5.37", 20mm thread	F-3A131-5A	54.95
80-96	Inner, 17.49", 20mm thread	F-3A131-6B	67.95
85-96	(from 5/85), outer, 5.51", 20mm thread, standard	F-3A131-6A	21.50
85-96	(from 5/85), outer, 5.37", 20mm thread, improved design	F-3A131-5A	54.95



3132 SEAL KIT, Spindle Arm

2 kits are required to complete a truck.

66-72		F-3132-1	CALL

3281 ADJUSTING SLEEVE ASSY, Tie Rod

66-75	5.50"	F-3281-6	27.65
76-77	4.50"	F-3281-3	18.70
78-79	5.50"	F-3281-7	36.70
80-96	RH, 5.00"	F-3281-4	23.35
80-96	LH, 5.00"	F-3281-5	25.80

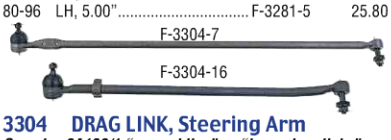

3304 DRAG LINK, Steering Arm

See also 3A130/1 "assemblies" or "inner drag links".

66-75	28.38"	F-3304-16	179.95
78-79	Assembly, 42.03"	F-3304-7	130.95



3590 PITMAN ARM

80-96	P/S	F-3590-19	96.95

STEERING WHEEL/HORN BUTTON



3A600 STYLING RING, by Grant

Styling rings make it easy to add style to your airbag equipped steering wheel. These are beautifully crafted and formed to exactly match the contours of the factory wheel rim and spokes. Molded from high strength composite materials featuring Grant's photolithographic process, a photo printing process that offers an extremely realistic detailed appearance.

94-96	Carbon fiber	F-3A600-1F	46.95



9C888 CRUISE CONTROL KIT, Grant Wheel

78-91	W/3 spoke Grant wheel	F-9C888-5249A	144.95
78-91	W/4 spoke Grant wheel	F-9C888-5249B	144.95
92-93	W/3 spoke Grant wheel	F-9C888-5275A	144.95
92-93	W/4 spoke Grant wheel	F-9C888-5275B	144.95

TF =Truck Freight, OS =UPS Oversize.
See shipping information on inside back cover.

3600 STEERING WHEEL, Grant Challenger 4 Spoke



Black cushion grip w/matte black spokes, 13 1/2" dia., 3" dish F-3600-414 59.95



Black cushion grip, 13 1/2" dia., 3" dish:
Satin silver spokes F-3600-415 59.95
Bright chrome spokes F-3600-440 71.50



Genuine hardwood walnut grip w/matte black spokes, 13 1/2" dia., 2 1/4" dish F-3600-404 84.95



Genuine hardwood walnut grip w/satin silver spokes, 13 1/2" dia., 2 1/4" dish F-3600-405 84.95

3600 STEERING WHEEL, Grant Challenger 3 Spoke



Black cushion grip w/satin silver spokes, 13 3/4" dia., 2 1/4" dish F-3600-860 45.50



Black cushion grip w/matte black spokes, 13 3/4" dia., 2 1/4" dish F-3600-870 45.50



Black cushion grip with high performance matte black spokes, 13 1/2" dia., 3 1/2" dish F-3600-334 30.95



Black cushion grip with high performance chrome spokes, 13 1/2" dia., 3 1/2" dish F-3600-838 33.95



3623 HORN BUTTON, Grant Challenger

66-93 Black center cap w/Grant logo F-3623-5897 3.95
66-93 Chrome center cap F-3623-5894 3.50
66-93 Black center cap F-3623-5895 3.50
66-93 Chrome center cap w/Grant logo F-3623-5896 3.95

3511 INSTALLATION KIT, Grant Challenger Steering Wheels

NEW! 67-74 ..... 3600-11K 19.50
75-77 ..... 3600-10K 19.50
78-91 ..... 3600-12K 19.50
92-93 ..... F-3511-5275 89.95





3600 STEERING WHEEL, Grant Signature 4 spoke

66-93 Mahogany wood grip, polished aluminum spoke, 14 3/4" dia., 3" dish F-3600-1177 264.95

3623 HORN BUTTON, Grant Signature Series

66-93 Polished billet aluminum F-3623-5870 29.95
66-93 Black billet aluminum F-3623-5871 29.95
66-93 Polished billet aluminum w/Ford logo F-3623-5875 35.95

3511 INSTALLATION KIT, Grant Signature Steering Wheels

75-77 Billet kit for Signature Series wheels F-3511-5285 54.95
78-91 Billet kit for Signature Series wheels F-3511-5249 54.95
92-93 Billet kit for Signature Series wheels F-3511-5275 89.95

3600 STEERING WHEEL, Original Style



66 Exact repro in black ebonite material F-3600-12A 204.95

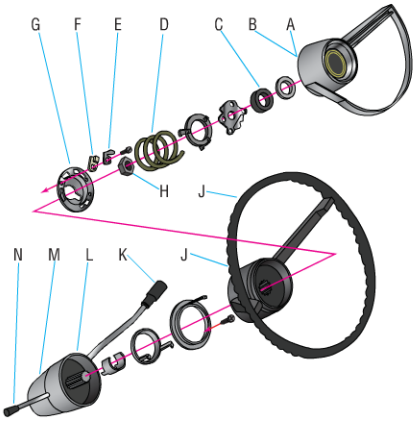

A 3649 Horn button
B 13A805 Horn ring
C 13A813 Pad, horn blow pressure
D 13A807 Spring, horn
E 13864 Contact, horn
F 13867 Insulator, horn
G 13A811 Ring, horn blow cam
H 350983 Nut, steering wheel
J 3600 Steering wheel
K 7213 Knob, shift handle
L 3511 Flange, steering column
M 7228 Collar, steering column
N 13305 Handle, turn signal

Items in blue- check listings for applications.



66-74 2 spoke, black, thin style F-3600-16 166.95



80-86 Vinyl, 15" dia., black, replacement F-3600-4 300.00



87-91 Black, vinyl, original Ford tooling F-3600-15 249.95



92-93 Vinyl, black F-3600-7 259.00



94-96 Leather, black, w/air bag, speed control F-3600-14 500.00


F-3649-1

3649 EMBLEM ASSY, Steering Wheel Hub

See also group 13A805.

78-79 W/sport wheel F-3649-1 24.95

13A805 HORN BUTTON



75-77 Camera case finish, also replaces woodgrain finish, repro F-13A805-3 99.95
75-77 Dlx burlwood finish, repro..... F-13A805-22 124.95
75-77 Dlx walnut finish, repro..... F-13A805-24 199.95
78-86 Black finish w/burlwood, "FORD", w/2 spoke whl., w/o speed ctrl, replacement for 82-86 rosewood, OE tool..... F-13A805-7 124.95
78-86 Black finish, "FORD", w/2 spoke whl., w/o speed ctrl, original Ford tooling..... F-13A805-9 99.95
NEW! 80-86 W/ 2 spoke wheel, w/o cruise control, black finish, "Ford", original Ford tooling, has "horn" embossment..... F-13A805-9A 99.95
NEW! 80-86 W/ 2 spoke wheel, w/o cruise control, black and oak wood grain trim, "Ford", with "horn" embossment F-13A805-25 124.95

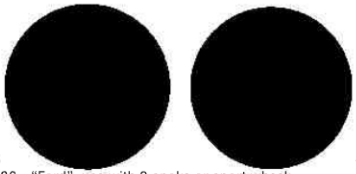
23 4

78-86 "Ford", use with 3 spoke or sport wheel:
Black w/black accent F-13A805-23 84.95
Black w/silver accent..... F-13A805-4 84.95



87-91 Black, "FORD", w/"A" frame 2 spoke whl, w/o speed ctrl..... F-13A805-13 199.95

359533 NUT, Steering Wheel

66-67 5/8"-18..... 350893-S 3.00
68-96 ..... 382412-S 3.00

13318 CAM, Turn Signal Turn Off

67-77 ..... F-13318-4 9.95

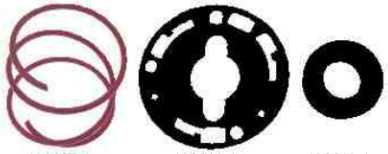
13A807-1 13A811-1 13A813-1

13A807 SPRING, Horn Button or Ring

66-74 ..... 13A807-1 3.85

13A811 RING, Horn Blow Cam

66-74 ..... 13A811-1 19.95

13A813 PAD, Horn Ring Blowing Pressure

66 Rubber, repro 13A813-1 8.95



13864/7 CONTACT & INSULATOR, Horn Blow

66-74 Contacts, 2 reqd 13864-1 5.00
66-74 Insulator, 2 reqd 13867-1 5.00
66-74 Contact and insulator kit, 4 pc, SPECIAL PRICE 13867-1K 14.95


3

7228 COLLARS, Steering Column Upper

78-79 A/T, tilt column F-7228-7 49.95
78-79 3sM/T..... F-7228-3 22.50

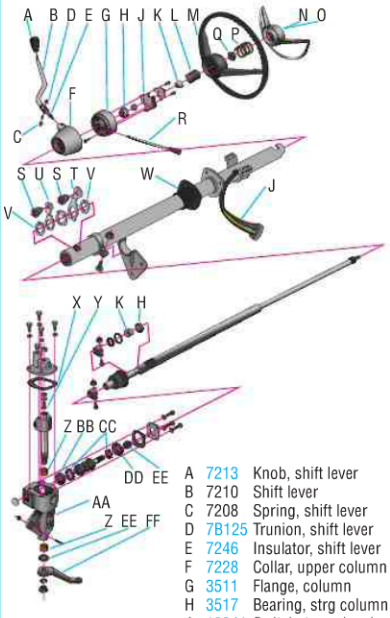

A	7213	Knob, shift lever	
B	7210	Shift lever	
C	7208	Spring, shift lever	
D	7B125	Trunion, shift lever	
E	7246	Insulator, shift lever	
F	7228	Collar, upper column	
G	3511	Flange, column	
H	3517	Bearing, strg column	
J	13341	Switch, turn signal	
K	3518	Sleeve, column bearing	
L	3520	Spring, column bearing	
M	3600	Steering wheel	
N	3649	Button, horn	
O	13A805	Pad, horn	
P	13A807	Spring, horn	
Q	350893	Nut, steering wheel	
R	13305	Lever, turn signal	
S	7341	Insulator, selector arm	
T	7302	Arm, column shift lever	
U	7303	Arm, column shift lever	
V	7D363	Thrust washer, lever arm	
W	3513	Seal, steering column	
X	3581	Gasket, gear box cover	
Y	3577	Adjuster screw, gear box	
Z	3576	Bearing, gear box shaft	
AA	3504	Gear box	
BB	3552	Race, column shaft	
CC	3571	Bearing, column shaft	
DD	3553	Race, column shaft	
EE	3591	Seal, column shaft	
FF	3590	Pitman arm	

Items in blue- check listings for applications



3D739 PIVOT PIN, Steering Column

78-91 W/tilt wheel F-3D739-1 19.28

STEERING SHAFT/COLUMN

3510 RETAINER, Column Lower Bearing Seal

66-72 ..... F-3510-1 5.00
73 (b4 ser#S40,001), w/4sM/T... F-3510-1 5.00
73 (b4 ser#S40,001), w/A/T or 3sM/T, M/S F-3510-1 5.00
73-79 (from 73 ser#S40,001), M/S.. F-3510-1 5.00



3511 FLANGE, Steering Column

66-72 M/T w/column shift..... 3511-1 29.95



3513 SEAL, Steering Column to Floor

66-72 At lower bearing..... F-3513-10 17.50
92-96 Lower, P/S..... F-3513-9 38.07


3517-1 3518-1 3520-1

3517 BEARING ASSY, Steering Column

66-72 (b4 72 ser#P40,001), M/S, upper or lower, 2 reqd 3517-1 3.97
72 (from ser#P40,001), P/S, upper 3517-1 3.97
73 Upper or lower 3517-1 3.97
74 M/S, upper or lower 3517-1 3.97
78-89 Upper, w/tilt wheel, 1 1/6" I.D. x 1 1/2" O.D. 3517-3 42.38
80-91 Lower..... F-3517-6 13.25
80-91 Upper 3517-4 17.98
92-96 Lower..... F-3517-8 7.33
92-96 Upper F-3517-9 7.33

3518 BEARING SLEEVE, Steering Column Tube

66-73	M/S, upper or lower	3518-1	8.52
72-73	P/S, upper	3518-1	8.52
74-75	P/S, upper	3518-2	5.95
75	M/S, upper	3518-2	5.95
76-79	Upper, w/fixed wheel	3518-2	5.95
80-89	Upper, w/fixed wheel	3518-2	5.95
90-96	Lower, tilt wheel	F-3518-6	2.39
90-96	Upper, tilt wheel	F-3518-7	4.78

3520 BEARING SPRING, Steering Column

66-77	Upper	3520-1	4.95



3524 SHAFT & WORM/RACK ASSY, Steering Input

78-79	Replacement, upper	F-3524-22	247.95
78-79	Replacement, upper, upgraded	F-3524-22A	279.95
78-79	W/rag jointed shaft, replacement, upper	F-3524-23	209.95
80-87	Replacement, upper	F-3524-24	247.95
80-87	Replacement, upper, upgraded	F-3524-24A	279.95
82-89	(from 12/81), steering column lower coupling assy, original	F-3B676-7	266.67
92-96	Upper, tilt column	F-3524-21	220.98

Upgraded version is custom built with vibration reducer to greatly reduce felt road shock at the steering wheel.



3A525 COUPLING, Steering Gear Input Shaft to Column Shaft

72-79	P/S	F-3A525-7	77.95
78-79	W/rag jointed shaft & F-3524-23	F-3A525-12	16.50

TF =Truck Freight, OS =UPS Oversize.
See shipping information on inside back cover.



3577 SCREW, Sector Shaft Thrust Adjusting

66-78	M/S	F-3577-1	6.95

3591 SEAL, Steering Gear Shaft

66-77	Sector shaft gear seal	F-3591-3A	7.60

3B676 SHAFT ASSY, Steering Gear

NEW!	80-81	(before 2/81), lower	F-3B676-5	99.95

3D732 REPAIR KIT, Strg Gear Sector Shaft

NEW!	72-74	170, 200, lower kit plus upper O-ring	3D732-1	15.95
NEW!	72-77	302, lower kit plus upper O-ring	3D732-1	15.95

STEERING GEAR BOX



3E501 SEAL KIT, P/S Gear Sector Shaft

80-96		F-3E501-3	21.98



3E502 SEAL KIT, P/S Input Shaft.

78-96		F-3E502-2	21.83



3504 GEAR BOX ASSY, Steering

All are for P/S unless noted otherwise. Note core charges on each item. See core information and requirements in the information section at the end of this catalog.

66-77	M/S, rebuilt, core chrg $200	F-3504-5A	438.95
78-79	Core chrg $225	F-3504-3	229.95
80-96	Core chrg $135	F-3504-2	162.95

19578 LUBRICANT, Steering Gear Box

NEW!	66-77	W/o integral P/S, each, tube for standard size grease gun	19578-1	4.50

3D733 SEAL KIT, P/S Gear Adjuster Plug

NEW!	72-74	170, 200	3D733-1	9.95
NEW!	72-77	302	3D733-1	9.95

3C538 SEAL & GASKET KIT, P/S Gear Master Kit, Complete

NEW!	72-74	170, 200	3C538-1	38.50
NEW!	72-77	302	3C538-1	38.50

P/S PUMP



3A006 CAP ASSY., Power Steering Reservoir

72-77	Replacement	3A006-3	7.95
72-77	Exact repro, painted	3A006-3A	16.95
72-77	Exact repro, chrome	3A006-3C	18.95
78-96	Original	F-3A006-3	6.43
78-96	Replacement	F-3A006-3A	3.75

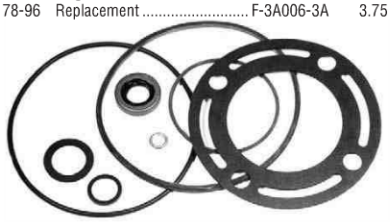

3B584 SEAL & GASKET KIT, Power Steering Pump

72-77		3B584-2	16.25
78-96		F-3B584-3	10.40



3A674 PUMP ASSY, Power Steering

REBUILT. Note core charges on each item. Returned core must have reservoir if the rebuilt unit included it. See core information and requirements in the information section at the end of this catalog.

72-74	Incl res., core chrg $40	F-3A674-6	57.95
72-77	Incl res., core chrg $40	F-3A674-3B	52.95
76-77	Incl res., core chrg $40	F-3A674-6	57.95
78-89	(b4 3/89), incl res., core chrg $40	F-3A674-4	49.95
78-89	(b4 3/89), Extra Heavy Duty*, includes res., core chrg $70	F-3A674-4HD	94.95
89-96	(from 3/89), incl res., metric hose thread, core chrg $70	F-3A674-8	57.95
89-96	(from 3/89), incl res., english hose thread, core chrg $70	F-3A674-13	74.95

**** This Extra Heavy Duty replacement is larger, stronger, and quieter than the OEM pump. It is constructed of cast iron with a steel reservoir as opposed to aluminum and plastic on the OEM pump. A limited lifetime warranty backs up your investment. Cores being returned for this item can be the OEM (aluminum and plastic) type pump.***



3N824 SWITCH ASSY, Auxiliary P/S Pump Pressure

87-93 W/4.9l, 5.0l F-3N824-1 36.28

P/S LINES

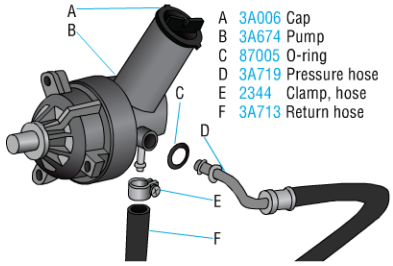

A 3A006 Cap
B 3A674 Pump
C 87005 O-ring
D 3A719 Pressure hose
E 2344 Clamp, hose
F 3A713 Return hose

Items in blue-check listings for applications.



2344 HOSE CLAMP KIT, Power Steering Return Line

66-90 Includes 2 pieces of 5/8" dia. hose clamps 3A713-1K 2.50



3A713 RETURN HOSE, Power Steering

On applications "sold per foot", 2 feet is sufficient for most applications unless noted otherwise.

72	170, OE style	F-3A713-18	10.25
73-74	200, OE style	F-3A713-18	10.25
80-83	300 (4.9l), excl oil cooler, OE style	F-3A713-19	21.75
80-83	300 (4.9l), oil cooler, as reqd, per foot	F-3A713-9	2.95
84-92	300 (4.9l), as reqd, per foot	F-3A713-9	2.95
93	300 (4.9l), as reqd, per foot	F-3A713-9	2.95
72-77	302, OE style	F-3A713-18	10.25
80-83	302 (5.0l), oil cooler, as reqd, per foot	F-3A713-9	2.95
80-83	302 (5.0l), excl oil cooler, OE style	F-3A713-19	21.75
84-96	302 (5.0l), as reqd, per foot	F-3A713-9	2.95
78-79	351 (5.8l), from gear, OE style	F-3A713-21	12.25
78-79	351 (5.8l), to cooler, as reqd, per foot	F-3A713-9	2.95
81-83	351 (5.8l), oil cooler, as reqd, per foot	F-3A713-9	2.95
80-83	351 (5.8l), excl oil cooler, OE style	F-3A713-19	21.75
84-96	351 (5.8l), as reqd, per foot	F-3A713-9	2.95
78-79	400 (6.6l), from gear, OE style	F-3A713-21	12.25
78-79	400 (6.6l), to cooler, as reqd, per foot	F-3A713-9	2.95

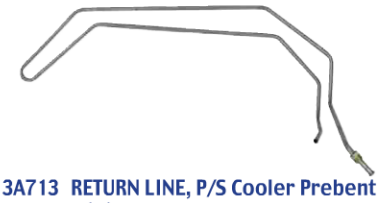

3A713 RETURN LINE, P/S Cooler Prebent Rigid

Prebent lines in carbon or stainless steel. Less rubber hose

78-79	Carbon	F-3A713-12	15.95
	Stainless	F-3A713-12S	17.95
NEW! 78-79	351-4v, less rubber hose, carbon steel	F-3A713-14	34.95
NEW! 78-79	Stainless steel	F-3A713-14S	44.95

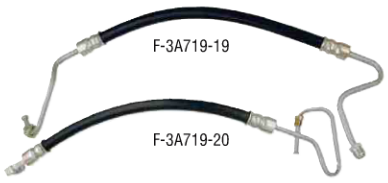

3A719 PRESSURE HOSE, Power Steering

72	170, OE style	F-3A719-19	35.50
73-74	200, OE style	F-3A719-19	35.50
90-93	300 (4.9l), OE style	F-3A719-20	33.95
80-86	300 (4.9l), w/o pressure switch port, OE style	F-3A719-33	18.25
87	300 (4.9l), OE style	F-3A719-9	48.75
88-89	300 (4.9l), A/T, OE style	F-3A719-9	48.75
88-89	300 (4.9l), M/T, OE style	F-3A719-35	18.10
72-77	302, OE style	F-3A719-19	35.50
80-86	302 (5.0l), w/o pressure switch port, OE style	F-3A719-33	18.25
87-89	302 (5.0l), OE style	F-3A719-9	48.75
90-91	(b4 3/6/91), 302 (5.0l), OE style	F-3A719-22	36.50
91-93	(from 3/6/91), 302 (5.0l), E4OD A/T, OE style	F-3A719-26	30.95
91-92	(from 3/6/91), 302 (5.0l), AOD A/T or M/T, OE style	F-3A719-9	48.75
93	302 (5.0l), AOD A/T or M/T, OE style	F-3A719-34	25.95
94	302 (5.0l), M/T, OE style	F-3A719-34	25.95
94-96	302 (5.0l), A/T, OE style	F-3A719-36	25.75
78-79	351 (5.8l), OE style	F-3A719-16	22.95
80-89	351 (5.8l), w/o pressure switch port, OE style	F-3A719-33	18.25
93	351 (5.8l), OE style	F-3A719-26	30.95
94-96	351 (5.8l), OE style	F-3A719-36	25.75
78-79	400 (6.6l), OE style	F-3A719-16	22.95



3A733 PULLEY, P/S, Replacement

87-96 5.0l, 5.8l F-3A733-10 19.95



See tool section for special Ford specified pulley removal and installation tools required for 73-96 P/S pumps with pressed-on pulley.

87005 O-RING KIT, P/S Pressure Hose

To pump, Teflon, includes 1 each 29.64" I.D. x 35/64" O.D. & 33/64" I.D. x 5/8" O.D. Teflon rings. Install carefully! Damage during installation will prevent proper seal. Soak in boiling water to soften and aid installation.

78-96 P/S 87004-S 2.35

STEERING STABILIZER

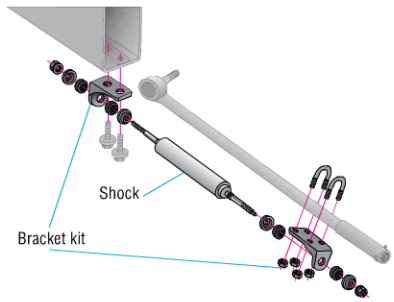

F-3E651-17B bracket kit, two F-3E651-17A shocks



66-69	Single shock, install to stock mounts	F-3E651-15A	39.95
70-79	Single shock, install to stock mounts	F-3E651-20A	39.95
78-79	Dual shock, 2 shocks reqd	F-3E651-17A	39.95
78-79	Dual shock bracket kit, excl sway bar	F-3E651-17B	60.75
80-91	Dual shock, 2 shocks reqd	F-3E651-17A	39.95
80-91	Dual shock bracket kit	F-3E651-18B	60.75
80-96	Single or dual shock	F-3E651-17A	39.95
80-96	Single or dual bracket kit	F-3E651-16B	62.25



18A124 BOOT, Steering Stabilizer

Black (**A**), blue (**B**), red (**C**), yellow (**D**), each, specify color code ..... F-18A124-3__ 6.85

See "AXLE" section for front and rear axle and differential parts.

COOLING SECTION INFORMATION

Radiator applications pg 47
Radiators/caps..... pg 48
Cooling fan.....pg 50
Hoses..... pg 51
Water pump.....pg 51
Thermostat ..... pg 52
Fan belts .....pg 52

Some abbreviations found in this section (alphabetical-read across):

chrg .. charge (core charge)
dia. .....diameter
excl.....excluding
FA..... Front axle
GVW.. Gross vehicle weight
HD ..... Heavy duty
incl ..... includes
l .. litre (metric engine size)
LH ..... drivers side
MB .....manual brakes
mm.....millimeter
M/T ... Manual transmission
OE Original equipment style
pc (s) .....Piece (s)
RA .....Rear axle
Repl'mt .....Replacement
reqd ..... Required
reqs.....Requires
RH.....passenger side
ser#.....serial number
w/..... Used with
W/o ..... Used without
WB ..... Wheel base

 # pounds-when used following a number (8500#= 8500 pounds)

A complete listing of abbreviations may be found at the rear of this catalog

RADIATOR



F-8005-521E

Radiators

Check out the pricing on our American made radiators and you'll find we beat out the Asian units being sold by many of our competitors. Better still, our U.S. made units are configured to fit your Truck perfectly.

GOLD CARD
LIFETIME LIMITED WARRANTY

Many of the radiators listed here are manufactured by Proliance (formerly known as Modine) and carry their exclusive "Gold Card" limited lifetime warranty.

PROLIANCE

Radiator Chart

Year	Engine Liters	Cyl	CID	Trans	Description	STD w/o AC	STD w/AC	HD w/o AC	HD w/AC
66-69		6	170	ALL		F-8005-100			
70		6	170	ALL		F-8005-105			
71		6	170	ALL		F-8005-107			
72		6	170	ALL		F-8005-109			
72		6	200	ALL		F-8005-109			
73		6	200	ALL	Down flow	F-8005-111			
74		6	200	ALL	Down flow	F-8005-113			
66-69		8	289	ALL	Cross flow	F-8005-521		F-8005-115	
66-69		8	289	A/T	Aluminum HD				F-8005-521A
66-69		8	289	M/T	Alumnium HD				F-8005-521M
70-77		8	302	ALL	Cross flow	F-8005-521		F-8005-115	
70-77		8	302	A/T	Aluminum HD			F-8005-521A	F-8005-521A
70-77		8	302	M/T	Aluminum HD			F-8005-521M	F-8005-521M
78-79		8	351	A/T		F-8005-433	F-8005-433	F-8005-433	F-8005-545
78-79		8	351	A/T	Optional 4 row "Eskimo"	F-8005-2302	F-8005-2302	F-8005-2302	F-8005-2306
78-79		8	351	M/T		F-8005-395	F-8005-433	F-8005-433	F-8005-545
78-79		8	351	M/T	Optional 4 row "Eskimo"		F-8005-2302	F-8005-2302	F-8005-2306
78-79		8	400	ALL		F-8005-433	F-8005-433	F-8005-433	F-8005-545
78-79		8	400	ALL	Optional 4 row "Eskimo"	F-8005-2302	F-8005-2302	F-8005-2302	F-8005-2306
80-82	4.9	6	300	ALL		F-8005-557			
80-82	5.0	8	302	A/T		F-8005-559	F-8005-560	F-8005-560	F-8005-561
80-82	5.0	8	302	M/T		F-8005-559	F-8005-560		
80-82	5.8	8	351	A/T		F-8005-559	F-8005-560	F-8005-560	F-8005-561
80-82	5.8	8	351	M/T		F-8005-559	F-8005-560		
83-84	4.9	6	300	ALL		F-8005-557	F-8005-558		
83-84	5.0	8	302	A/T		F-8005-559	F-8005-560	F-8005-560	F-8005-561
83-84	5.0	8	302	M/T		F-8005-559	F-8005-560		
83-84	5.8	8	351	A/T		F-8005-560	F-8005-560	F-8005-560	F-8005-561
83-84	5.8	8	351	M/T		F-8005-559	F-8005-560	F-8005-560	F-8005-561
85-86	4.9	6	300	A/T		F-8005-2184	F-8005-2184		
85-86	4.9	6	300	M/T		F-8005-2185	F-8005-2184		
85-86	5.0	8	302	A/T		F-8005-2186	F-8005-2186	F-8005-2186	F-8005-2183
85-86	5.0	8	302	M/T		F-8005-896	F-8005-896	F-8005-896	F-8005-2183
85-86	5.8	8	351	A/T		F-8005-2186	F-8005-2186	F-8005-2186	F-8005-2183
85-86	5.8	8	351	M/T		F-8005-896	F-8005-896	F-8005-896	F-8005-2193
87	4.9	6	300	A/T		F-8005-2184	F-8005-2189		
87	4.9	6	300	M/T		F-8005-2184	F-8005-2184	F-8005-2184	F-8005-2189
87	5.0	8	302	A/T		F-8005-2186	F-8005-2186	F-8005-2183	F-8005-2183
87	5.0	8	302	M/T		F-8005-896	F-8005-896	F-8005-2183	F-8005-2183
87	5.8	8	351	A/T		F-8005-2186	F-8005-2186	F-8005-2183	F-8005-2183
87	5.8	8	351	M/T		F-8005-896	F-8005-896	F-8005-896	F-8005-2183
88	4.9	6	300	A/T		F-8005-2184	F-8005-2189		
88	4.9	6	300	M/T		F-8005-2184	F-8005-2184	F-8005-2184	F-8005-2189
88	5.0	8	302	A/T		F-8005-2188	F-8005-2196	F-8005-2183	F-8005-2183
88	5.0	8	302	M/T		F-8005-896	F-8005-896	F-8005-2183	F-8005-2183
88	5.8	8	351	A/T		F-8005-2186	F-8005-2196	F-8005-2183	F-8005-2183
88	5.8	8	351	M/T		F-8005-896	F-8005-896	F-8005-2183	F-8005-2183
89	4.9	6	300	A/T		F-8005-2184	F-8005-2189		
89	4.9	6	300	M/T			F-8005-2184	F-8005-2184	F-8005-2189
89	5.0	8	302	A/T		F-8005-2186	F-8005-2196	F-8005-2196	F-8005-2183
89	5.0	8	302	M/T		F-8005-896	F-8005-896	F-8005-896	F-8005-2183
89	5.8	8	351	A/T		F-8005-2186	F-8005-2186	F-8005-2183	F-8005-2183
89	5.8	8	351	M/T		F-8005-896	F-8005-896	F-8005-896	F-8005-2183
90	4.9	6	300	A/T		F-8005-2184	F-8005-2189	F-8005-2189	F-8005-2189
90	4.9	6	300	M/T		F-8005-2184	F-8005-2184	F-8005-2184	F-8005-2189
90	5.0	8	302	A/T		F-8005-2186	F-8005-2196	F-8005-2183	F-8005-2183
90	5.0	8	302	M/T		F-8005-896	F-8005-896	F-8005-896	F-8005-2183
90	5.8	8	351	A/T	w/A4OD	F-8005-2183	F-8005-2183		
90	5.8	8	351	A/T	w/o A4OD	F-8005-2186	F-8005-2186	F-8005-2186	F-8005-2186
90	5.8	8	351	M/T		F-8005-896	F-8005-896	F-8005-2183	F-8005-2183
91	4.9	6	300	A/T		F-8005-2184	F-8005-2189	F-8005-2189	F-8005-2189
91	4.9	6	300	M/T		F-8005-2184	F-8005-2185	F-8005-2184	F-8005-2189
91	5.0	8	302	A/T		F-8005-2186	F-8005-2186	F-8005-2183	F-8005-2183
91	5.0	8	302	M/T		F-8005-896	F-8005-896	F-8005-2183	F-8005-2183
91	5.8	8	351	A/T		F-8005-2186	F-8005-2186	F-8005-2183	F-8005-2183
91	5.8	8	351	M/T		F-8005-896	F-8005-896	F-8005-2183	F-8005-2183
92	4.9	6	300	A/T	C6 A/T	F-8005-2184			
92	4.9	6	300	A/T	C6 or E4OD			F-8005-2189	F-8005-2189
92	4.9	6	300	A/T	E4OD (from 5/92)	F-8005-2184			
92	4.9	6	300	M/T		F-8005-2184	F-8005-2184		
92	5.0	8	302	A/T	AOD	F-8005-2186			
92	5.0	8	302	A/T	E4OD	F-8005-2186	F-8005-2183	F-8005-2183	F-8005-2183
92	5.0	8	302	M/T	(b4 5/92)			F-8005-896	F-8005-2183
92	5.8	8	351	A/T	AOD or E4OD	F-8005-2186	F-8005-2186	F-8005-2183	F-8005-2183
92	5.8	8	351	M/T	(b4 5/92)	F-8005-896	F-8005-896	F-8005-2183	F-8005-2183
93-96	5.0	8	302	A/T		F-8005-2186	F-8005-2196	F-8005-2183	F-8005-2183
93-96	5.0	8	302	M/T		F-8005-896	F-8005-896	F-8005-896	F-8005-2183
93-96	5.8	8	351	A/T		F-8005-2186	F-8005-2186	F-8005-2183	F-8005-2183
93-96	5.8	8	351	M/T		F-8005-896	F-8005-896	F-8005-2183	F-8005-2183

Radiator Specifications & Pricing

Core Height	Core Width	Core Thick	Row Count	Inlet/side	Outlet/side	Flange	Oil Cooler	Part Number	Price
17 3/8	17 1/8	1 1/4	2	1 1/4 RH	1 1/4 LH	rear	6"	F-8005-100	269.95
17 3/8	17 1/8	2	3	1 1/4 RH	1 1/4 LH	rear	6"	F-8005-105	289.95
17 1/4	17 1/4	1 7/8	3	1 1/4 RH	1 1/4 LH	rear	6"	F-8005-107	289.95
17 3/8	17	1 3/8	2	1 1/4 RH	1 1/4 LH	rear	6"	F-8005-109	269.95
17 3/8	17	1 1/4	2	1 1/4 RH	1 1/4 LH	rear	6"	F-8005-111	269.95
17 3/8	20	1 1/2	2	1 1/4 RH	1 1/4 LH	rear	6"	F-8005-113	269.95
18 3/4	18 3/4	2 3/8	4	1 1/2 LH	1 3/4 RH	top/btm	10"	F-8005-115	371.95
18	23 3/4	1 1/4	2	1 3/4 RH	1 3/4&2 LH	double	12"	F-8005-395	237.95
19 1/4	26 1/4	2	3	1 3/4&2RH	2 LH	double	12"	F-8005-433	233.95
19 1/4	19	2	3	1 1/2 LH	1 3/4 RH	top/btm	10"	F-8005-521	576.95
19 1/4	19	2	3	1 1/2 LH	1 3/4 RH	top/btm	10"	F-8005-521E	349.95
19 1/4	19	2	3	1 1/2 LH	1 3/4 RH	top/btm	10"	F-8005-521A	CALL
19 1/4	19	2	3	1 1/2 LH	1 3/4 RH	top/btm	10"	F-8005-521M	CALL
24 1/4	26 1/4	2	3	1 3/4 RH	2 LH	double	12"	F-8005-545	524.95
21 5/8	19 1/2	1 1/2	2	1 1/2 LH	1 3/4 RH	saddle	12"	F-8005-557	219.95
27 1/2	19 1/2	1 1/2	2	1 1/2 LH	1 3/4 RH	saddle	12"	F-8005-558	236.95
21 5/8	19 1/2	1 1/2	2	1 1/2 RH	1 3/4 LH	saddle	12"	F-8005-559	168.95
27 1/2	19 1/2	1 1/2	2	1 1/2 RH	1 3/4 LH	saddle	12"	F-8005-560	208.95
27 1/2	19 1/2	2 1/4	3	1 1/2 RH	1 3/4 LH	saddle	12"	F-8005-561	224.95
27 5/8	17 3/4	1 1/8	1	1 3/4 RH	1 3/4 LH	corner	no	F-8005-896	152.95
15 5/8	37	2 3/8	4	1 3/4 RH	2 LH	double	12"	F-8005-2148	362.95
27 5/8	17 3/4	2 1/4	2	1 3/4 RH	1 3/4 LH	corner	12"	F-8005-2183	186.95
27 5/8	17 3/4	1 1/8	1	1 3/4 LH	1 3/4 RH	corner	12"	F-8005-2184	144.95
27 5/8	17 3/4	1 1/8	1	1 3/4 RH	1 3/4 LH	corner	12"	F-8005-2186	141.95
27 5/8	17 3/4	2 1/4	2	1 3/4 LH	1 3/4 RH	corner	12"	F-8005-2189	171.95
19 1/4	26 1/4	2 1/2	4	1 3/4,2 RH	2 LH	double	12"	F-8005-2302	334.95
24 1/4	26 1/4	2 5/8	4	1 3/4 RH	2 LH	double	12"	F-8005-2306	318.95

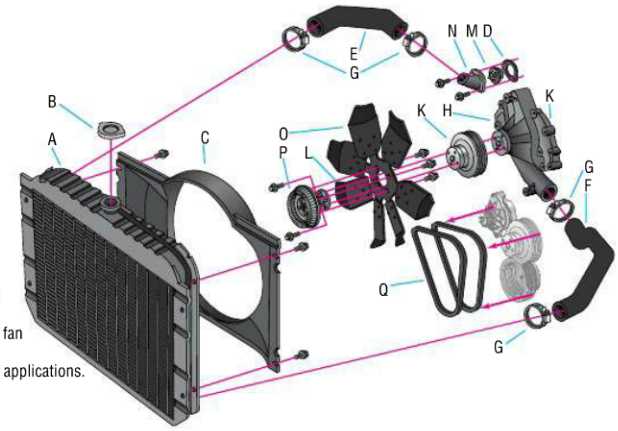

A 8005 Radiator
B 8100 Cap
C 8146 Shroud
D 8255 Gasket, thermostat
E 8260 Hose, upper
F 8286 Hose, lower
G 8287 Clamp, hose
H 8501 Water pump
J 8507 Gasket, pump mtg
K 8509 Pulley, water pump
L 8546 Spacer, fan
M 8575 Thermostat
N 8592 Housing, thermostat
O 8600 Fan
P 8A616 Clutch, thermostatic fan
Q 8620 Belt, fan
Items in blue-check listings for applications.



8K103 CAP, Coolant Recovery Tank

78-79 302, 351, 400 ..... F-8K103-1 10.70

8100 CAP, Radiator Pressure



8100-2 8100-4

66-72 12-15#, lever style 8100-2 9.95
66-96 13#, zinc, replacement 8100-4 6.95

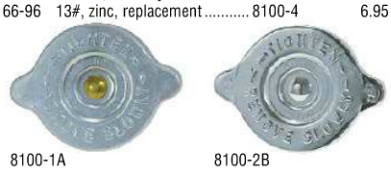

8100-1A 8100-2B

66-67 13#, "SMCO", original style, zinc 8100-1A 21.50
66-67 13#, "SMCO", original style, chrome 8100-1C 21.50
67-72 13#. "Autolite", original style, zinc 8100-3A 21.50
67-72 13#, "Autolite", original style, chrome 8100-2B 21.50



4A

72-79 13#, "Motorcraft", original style, OE tool, zinc 8100-4A 21.50
72-79 13#, "Motorcraft", original style, OE tool, chrome 8100-4B 19.95



73-79 13-16#, zinc, w/down flow radiator, Motorcraft replacement 8100-4 6.95



73-79 13#, w/cross flow radiator F-8100-11 6.95

TOLL-FREE ORDER LINES





RAD CAP®, Sacrificial Anode Cap

Rad Caps® are specially designed with a sacrificial magnesium anode to absorb the EME (electrolytic metal erosion) that eats away at the aluminum and iron parts of the engine as well as the gaskets! This condition exists whether the truck is stored or driven. Periodic replacement is required!

66-98 13#, custom six-sided cap design 952-13 14.95



8100 RADIATOR CAP, Billet Aluminum

66-96 12#, billet w/Red caution and hot, utilizes Motorcraft cap with a custom billet cover 8100-5 36.95

8115 DRAINCOCK, Radiator



66-96 1/4" npt, straight outlet..... 8115-1 1.95
66-77 8 cyl., right angle outlet, orig . F-8115-3 6.67
66-77 8 cyl., right angle outlet, reproF-8115-3A 7.95
78-84 All, right angle outlet, 1/8" npt, original F-8115-3 6.67
78-84 All, right angle outlet, 1/8" npt, repro F-8115-3A 7.95



85 300 (4.9l), 351 (5.8l), A/T F-8115-4 3.50
85 300 (4.9l), 351 (5.8l), M/T F-8115-5 3.50
85 302 (5.0l) F-8115-6 3.50
86-89 All eng's F-8115-6 3.50
90-92 300 (4.9l) F-8115-5 3.50
90-96 302 (5.0l), 351 (5.8l)..... F-8115-6 3.50

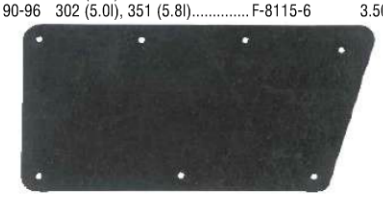

8C122 HEAT SHIELDS, Radiator Support

78-79 To grille F-8C122-1 9.95



8A193 SUPPORT SET, Radiator Mounting

66-77 W/3 row radiator, black, incl insulators F-8A193-2A 29.95
66-77 W/3 row radiator, stainless steel, incl insulators F-8A193-2B 39.95
66-77 W/4 row radiator, stainless steel, incl insulators F-8A193-2D 39.95



7D273 FITTING, Radiator

To trans line, 5/16" trans line, not included with radiators and old ones are tough to remove, use pipe joint compound to seal threads to radiator.

80-96 5/16" hex, pair F-7D273-1 9.95
80-96 11/16" hex, pair F-7D273-2 5.25
80-96 3/4" hex, pair F-7D273-3 4.25

8A080 OVERFLOW TANK, Radiator



66-77 Repro, exact detail with straps made from stainless steel instead of carbon as was original. F-8A080-1A 39.95



87-96 Combination washer fluid/overflow tank F-17618-9 46.98



Polished stainless steel. Sleek, custom look.

66-96 15", 10.5" mounting 8A080-1A 59.95
66-96 17", 12.5" mounting 8A080-2A 59.95

COOLING FAN

8146 SHROUD, Radiator Fan

s/c = standard cooling, x/c = extra cooling, sx/c = super extra cooling



66-77 289, 302..... F-8146-8 129.95

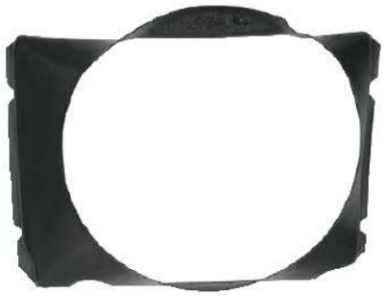

67-79 300, 302, w/HD cool! fiberglass repro. Fits 19x26" rad. core. Does not fit sx/c!... F-8146-15 99.95



67-79 300, 302, w/STD cool! Fiberglass repro. Fits 19x26" rad. core. Does not fit sx/c! F-8146-16 124.95



78-79 351, x/c..... F-8146-9 204.83
78-79 351, 400, w/A/C F-8146-9 204.83

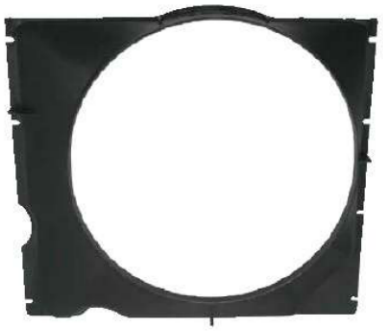

78-79 351, 400, s/c, casting "D7TA-SA" F-8146-11 119.95



80-89 5.0l, w/A/C, x/c, sx/c F-8146-12 27.95
85-89 5.8l, sx/c F-8146-12 27.95
90-93 5.0l, 5.8l, s/c F-8146-17 56.95



85-89 5.8l, w/A/C, s/c, x/c F-8146-17 56.95
90-93 5.0l, 5.8l, s/c F-8146-17 56.95

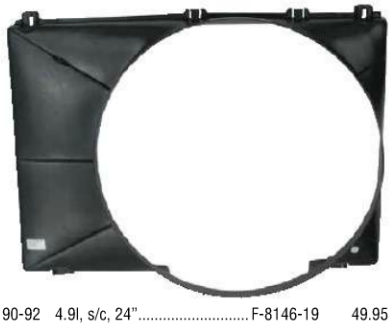

90-92 4.9l, s/c, 24" F-8146-19 49.95



90-93 5.0l, 5.8l, sx/c F-8146-12 27.95



94-96 5.0l, 5.8l, s/c, original F-8146-23 113.52
94-96 5.0l, 5.8l, s/c, repro F-8146-23A 49.95



94-96 5.0l, 5.8l, sx/c F-8146-24 105.70



8509 PULLEY, Water Pump

67 289, painted, repro 8509-1 54.95

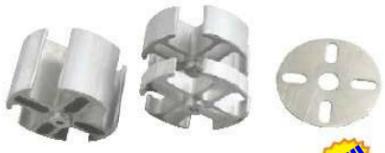

8546 SPACER, Pulley To Fan

NEW!

Aftermarket style, aluminum, can stack to a max of 3", use with non-clutch metal fans only.

66-79 3/32" thick 8546-2A 6.50
66-79 1/2" thick 8546-2B 18.95
66-79 1" thick 8546-2C 18.95
66-79 2" thick 8546-2D 18.95



8A564 VACUUM SWITCH, Coolant Temp. Control

74-89 ..... F-8A564-1 17.95



8600 FAN, Radiator Cooling

66-77 200, steel, 6 blade, 15", pulls more air than original 4 blade fans 8600-9 31.95



8A616 CLUTCH ASSY, Thermostatic Fan

66-72 170 ..... F-8A616-9 46.95
72-74 200 ..... 8A616-1 38.95
80-82 300 (4.9l) 8A616-1 38.95
83-86 300 (4.9l) F-8A616-1 47.95
87-92 300 (4.9l) F-8A616-2 47.95
70-86 302 (5.0l), w/A/C F-8A616-3 67.95
87-93 302 (5.0l), w/o A/C F-8A616-6 47.95
87-96 302 (5.0l), w/A/C F-8A616-8 68.95
94-96 302 (5.0l), w/o A/C F-8A616-8 68.95
78-79 351M, w/A/C or trailer towing F-8A616-3 67.95
69-87 351W (5.8l), w/A/C F-8A616-3 67.95
88-96 351W (5.8l) F-8A616-8 68.95
78-79 400 (6.6l) F-8A616-3 67.95



Improve cooling efficiency while freeing up power with this assortment of electric cooling fans. Set up for manual control or add the thermostatic switch for automatic operation. Mounts are available in billet aluminum for the custom look. Requires 12v system. Reversable.

FAN, Electric Cooling by Derale Cooling

10" dia., 2.6" deep, 650 cfm	F-8K620-1	82.95
12" dia., 2.4" deep, 880 cfm	F-8K620-2	89.95
14" dia., 3.2" deep, 1350 cfm	F-8K620-3	104.95
16" dia., 3.9" deep, 2175 cfm	F-8K620-4	138.95

DUAL MOUNT KIT, Electric Fan

For dual mounting of 10" or 12" fans .	F-8K621-1	49.95

PRESET THERMOSTATIC SWITCH

For electric fans set to turn on at 180, off at 170	F-8K621-2	28.95

ADJUSTABLE THERMOSTATIC SWITCH

For dual fan installations	F-8K621-3	52.95

SWITCH, Manual Control For Electric Fans

	F-8K621-4	3.25

INSTALLATION KIT, Electric Fan

Includes metal rod mtg kit and manual switch w/wiring and circuit breaker

	F-8K621-5	13.50

MOUNTING KIT, METAL ROD, Standard Mounting

	F-8K621-6	9.50

MOUNTING BRACKET SET, Billet Aluminum

	F-8K621-7	52.95

HOSES



8260/8286 HOSE, Radiator Upper/Lower

See group 8597 for water pump bypass hoses. Many hoses are marked "A", "B", "C", "D", etc on them. These are cut marks. Some hoses need to be cut at these marks as noted in the following listings.

8260 HOSE, Radiator, Upper

66-74	170, 200	F-8260-45	12.15
66-68	289, motor to tank	F-8260-4	11.25
66-68	289, tank to radiator	F-8260-53	15.75
80-84	300 (4.9l), w/A/C	F-8260-23	22.85
80-84	300 (4.9l), s/c, w/o A/C	F-8260-24	21.40
80-84	300 (4.9l), x/c, w/o A/C	F-8260-23	22.85
85-92	300 (4.9l)	F-8260-32	19.75
69-77	302 (5.0l)	F-8260-44	18.60
72-79	302 (5.0l), w/A/C or x/c, double dia. hose	F-8260-18	17.75
80-84	302 (5.0l)	F-8260-25	23.95
85	302 (5.0l)	F-8260-34	20.60
86	302 (5.0l), w/EFI	F-8260-34	20.60
86	302 (5.0l), w/o EFI	F-8260-33	21.75
87	302 (5.0l)	F-8260-37	21.95
88	302 (5.0l), excl F350	F-8260-37	21.95
89-95	302 (5.0l)	F-8260-37	21.95
96	302 (5.0l)	F-8260-42	29.25
78-79	351M (5.8l)	F-8260-22	17.95
80-84	351W (5.8l)	F-8260-25	23.95
85	351W (5.8l), w/o EFI	F-8260-33	21.75
85	351W (5.8l), w/ EFI	F-8260-34	20.60
86-87	351W (5.8l)	F-8260-33	21.75
88-95	351W (5.8l)	F-8260-37	21.95
96	351W (5.8l)	F-8260-42	29.25
78-79	400 (6.6l)	F-8260-22	17.95

8286 HOSE, Radiator, Lower

66-74	170, 200	F-8286-10	18.35
66-68	289	F-8286-32	20.90
80-91	300 (4.9l)	F-8286-24	21.70
92	300 (4.9l)	F-8286-24	21.70
69-77	302 (5.0l)	F-8286-32	20.90
78-79	302 (5.0l), s/c, excl A/C, single dia. hose	F-8286-20	17.50
78-79	302 (5.0l), w/A/C or x/c, double dia. hose	F-8286-21	19.95
80	302 (5.0l), s/c, 27" wide rad., w/o A/C, cut at A	F-8286-26	18.90
80	302 (5.0l), w/A/C or x/c, 33" wide rad.	F-8286-25	26.25
81-82	302 (5.0l), 27" wide rad., w/o A/C or P/S, cut at A	F-8286-26	18.90
81-82	302 (5.0l), w/P/S, 27" wide rad., w/o A/C, cut at A	F-8286-26	18.90
81-83	302 (5.0l), 33" wide rad., w/o A/C	F-8286-25	26.25
81-85	302 (5.0l), w/A/C	F-8286-25	26.25
83-85	302 (5.0l), w/27" wide rad., w/o A/C or P/S, cut at A	F-8286-26	18.90
83-85	302 (5.0l), w/P/S and 27" wide rad., w/o A/C, cut at A	F-8286-26	18.90
84-85	302 (5.0l), w/33" wide rad., w/o A/C	F-8286-25	26.25
86-89	302 (5.0l)	F-8286-25	26.25
90-92	302 (5.0l), cut at A	F-8286-25	26.25
93-96	302 (5.0l)	F-8286-25	26.25
78-79	351M (5.8l), w/4" wide rad. tank	F-8286-23	30.45
78-79	351M (5.8l), w/2 3/8" wide rad. tank, P/S	F-8286-21	19.95
78-79	351M (5.8l), w/2 3/8" wide rad. tank, w/o P/S	F-8286-21	19.95
78-79	351M (5.8l), w/2 3/4" wide rad. tank	F-8286-2116.50	
79	351M (5.8l), w/4" wide rad. tank, excl F250 4x4	F-8286-23	30.45
80-82	351W (5.8l)	F-8286-25	26.25
83-84	351W (5.8l), w/27" wide rad., w/o A/C, cut at A	F-8286-26	18.90
83-84	351W (5.8l), w/33" wide rad., w/o A/C	F-8286-25	26.25
83-84	351W (5.8l), w/A/C	F-8286-25	26.25
85-89	351W (5.8l)	F-8286-25	26.25
90-92	351W (5.8l), cut at A	F-8286-25	26.25
93-96	351W (5.8l), w/o oil cooler	F-8286-25	26.25
93-94	351W (5.8l), w/oil cooler	F-8286-40	30.15
93-96	351W (5.8l), oil cooler adapter	F-8286-41	80.25
95-96	351W (5.8l), w/oil cooler	F-8286-44	47.30
78-79	400 (6.6l), w/4" wide rad. tank	F-8286-23	30.45
78-79	400 (6.6l), w/2 3/8" wide rad. tank	F-8286-21	19.95
78-79	400 (6.6l), w/2 3/4" wide rad. tank	F-8286-21	19.95
79	400 (6.6l), w/4" wide rad. tank	F-8286-23	30.45

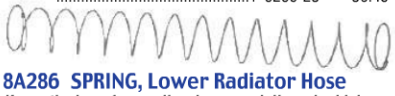

8A286 SPRING, Lower Radiator Hose

Keeps the hose from collapsing especially under higher rpm usage. 13"l x 1.625" O.D., stainless steel

66-96	289, 302, 351, 400	8A286-1A	4.25



8287 HOSE CLAMP, Radiator, Replacement Style

66	6 cyl., upper, 1 7/8" O.D.	F-8287-1	1.50
66	6 cyl., lower, 2 1/8" O.D.	F-8287-2	1.50

8287 HOSE CLAMP, Stainless Steel

All stainless steel, rolled band edges and smooth inside surface insure high and uniform clamping forces without pinching hose. Polished to perfection!

5/16" to 5/8", size #3	8287-20S	4.20
7/16" to 3/4", size #4	8287-21S	3.70
1/2" to 7/8", size #6	8287-22S	3.75
5/8" to 1 1/16", size #8	8287-23S	5.20
3/4" to 1 3/16", size #10	8287-24S	3.95
7/8" to 1 7/16", size #12	8287-25S	3.95
1 1/16" to 1 5/8", size #16	8287-26S	3.95
1 1/4" to 1 7/8", size #20	8287-27S	4.25
1 1/2" to 2 1/16", size #24	8287-28S	4.75
1 3/4" to 2 3/8", size #28	8287-29S	4.95
2" to 2 11/16", size #32	8287-30S	4.95

Typical 289/302 reqs 4 size #8's, 2 #24's & 2 #28's.

WATER PUMP



8501 WATER PUMP, New

ALL water pumps come with a mounting gasket, extra gaskets may be found in the ENGINE GASKET listings. Not rebuilt!

66-72	170	8501-1A	50.50
72-74	200	8501-1A	50.50
	289	8501-2A	65.95
80-82	300 (4.9l)	F-8501-10	48.25
83-86	300 (4.9l)	F-8501-11	44.95
87-92	300 (4.9l)	F-8501-12	61.75
69-77	302, excl 74 w/TE	8501-2A	65.95
74	302, w/therm. emission	F-8501-14	64.95
75-86	302 (5.0l)	8501-7A	55.95
87-96	302 (5.0l)	F-8501-16	50.50
78-79	351M	8501-8A	62.25
80-86	351W (5.8l)	8501-7A	55.95
87-96	351W (5.8l)	F-8501-16	50.50
78-79	400 (6.6l)	8501-8A	62.25

8501 WATER PUMP, Rebuilt CHROME

65-73	289, cast iron	8501-2C	109.95
68-69	302, RH inlet	8501-2C	109.95
70-78	302, 351W	8501-7C	112.95
78-79	351M, 400	8501-8C	111.95



8501 WATER PUMP, Performance

66-68	289, 30% increase in flow rate, HD bearing, cast iron	8501-2B	71.95
NEW! 70-78	302, 351W, 30 percent increase in flow rate, HD bearing, cast iron	8501-7B	71.95

THERMOSTAT



8A564 VACUUM SWITCH, Coolant Temp Control

74-89		F-8A564-1	17.95

8575 THERMOSTAT, Water Temperature

See ENGINE GASKET section for thermostat gaskets under group number 8255. Gaskets are not included with thermostats.

66-96	170, 200, 289, 300 (4.9l), 302 (5.0l), 351W (5.8l): 160°	8575-1	2.50
	180°	8575-2	2.50
	190/195°	8575-3	2.50
	190/195° heavy duty version	F-8575-11A	6.95
78-79	351M, 400, 180°	F-8575-12	4.95
78-79	351M, 400, 190/195°	8575-4	4.50

Note that the recommended thermostat for most computer controlled engines is the 190/195° version. Use of a different temperature rating may effect computer performance.



8592 HOUSING, Water Outlet

66-72	170	8592-2A	13.75
NEW! 66	170, early style without adapter hole, limited availability	8592-2B	19.00
72-74	200	8592-2A	13.75
66-68	289, original style	8592-9	19.95
80-84	300 (4.9l), unleaded fuel	F-8592-14	15.50
84	300 (4.9l), leaded fuel	F-8592-22	17.30
85-90	300 (4.9l)	F-8592-18	15.95
90-92	300 (4.9l)	F-8592-19	21.95
69-79	302	8592-3B	10.95
80-84	302 (5.0l)	F-8592-15	26.50
85-94	302 (5.0l)	8592-3B	10.95
95-96	302 (5.0l)	F-8592-19	21.95
78-79	351M, 400	F-8592-8	22.80
80-85	351W (5.8l)	F-8592-15	26.50
86-94	351W (5.8l)	8592-3B	10.95
95-96	351W (5.8l)	F-8592-19	21.95





8597 HOSE, Water By-Pass

66-68	289, single dia. hose	8597-1	6.95
69-70	302 (5.0l), single dia. hose	8597-1	6.95
69-79	302 (5.0l)	F-8597-4	10.50
70-77	302 (5.0l), double dia. hose	8597-3	8.50
80-96	302 (5.0l), cut to fit	F-8597-4	10.50
81	351W (5.8l)	F-8597-4	10.50
82-87	351W (5.8l)	F-8597-5	10.95
88-96	351W (5.8l)	F-8597-4	10.50



10884 SENDER, Water Temp.

66	(b4 66 ser#751,001), 1/8"-27 pipe thread, 12v	10884-1	10.50
66-70	(from 66 ser#751,001)	F-10884-5	24.95
70-72	302	10884-4	12.95
73-79	One contact 1 9/16" total length	F-10884-10	11.15
80-89		F-10884-9	14.60
90-96		10884-4	12.95

FAN/SERPENTINE BELT



8620 BELTS, Engine Accessory Drive

	170		
69-72	170, Fan & alt.	F-8620-15	12.50
69-71	170, Air pump	F-8620-19	14.35
66-68	170, Fan & air pump	F-8620-16	14.35
66-68	170, Fan & alt.	F-8620-15	12.50
	200		
72-74	200, Fan & alt.	F-8620-15	12.50
	289		
66-68	289, Fan & air pump	F-8620-18	15.50
66-68	289, Fan & alt.	F-8620-17	13.60
	300		
80-82	300 (4.9l), Air pump, w/o A/C	F-8620-47	13.55
80-83	300 (4.9l), Air pump, w/A/C	F-8620-39	12.15
83	300 (4.9l), Air pump, w/o A/C	F-8620-50	13.60
84	300 (4.9l), Air pump, 6 3/8" dia. pulley, w/o A/C	F-8620-51	12.70
84-85	300 (4.9l), Air pump, 5 1/8" dia. pulley, w/o A/C	F-8620-48	13.25
84	300 (4.9l), Air pump, 7" dia. pulley, w/A/C	F-8620-39	12.15
84-85	300 (4.9l), Air pump, 5 5/8" dia. pulley, w/A/C	F-8620-34	11.95
80-81	300 (4.9l), Fan & A/C	F-8620-88	22.10
82-86	300 (4.9l), Fan & A/C, factory installed	F-8620-91	23.20
80-82	300 (4.9l), Fan, w/AC, w/o P/S	F-8620-60	15.80
86	300 (4.9l), Fan & air pump, w/A/C	F-8620-3	12.95
86	300 (4.9l), Fan & air pump, w/o A/C	F-8620-48	13.25
80	300 (4.9l), Fan & alt., w/60 amp alt., A/C	F-8620-51	12.70
80-82	300 (4.9l), Fan & alt., w/70 or 100 amp alt., w/o A/C	F-8620-32	14.10
80-86	300 (4.9l), Fan & alt., w/A/C, 70 or 100 amp alt.	F-8620-11	14.15
81-86	300 (4.9l), Fan & alt., w/A/C, w/o 70 or 100 amp alt.	F-8620-51	12.70
80-82	300 (4.9l), Fan & alt., w/o A/C, 70 or 100 amp alt.	F-8620-52	13.85
83	300 (4.9l), Fan & alt., w/o A/C, 70 or 100 amp alt.	F-8620-51	12.70
84	300 (4.9l), Fan & alt., w/o A/C, 70 or 100 amp alt.	F-8620-52	13.85
85-86	300 (4.9l), Fan & alt., w/o A/C, 70 or 100 amp alt.	F-8620-53	13.55
81-86	300 (4.9l), Fan & P/S, w/A/C	F-8620-61	16.35
80-86	300 (4.9l), P/S, w/o A/C	F-8620-14	16.60
87-95	300 (4.9l), serpentine, w/o A/C	F-8620-115	45.40
87-90	300 (4.9l), serpentine, w/A/C, A/T	F-8620-116	40.10
87-90	300 (4.9l), serpentine, w/A/C, M/T	F-8620-118	37.85
91-92	300 (4.9l), serpentine, w/A/C	F-8620-116	40.10
	302		
80-81	302 (5.0l), A/C	F-8620-87	22.10
82-86	302 (5.0l), A/C	F-8620-93	21.50
80-82	302 (5.0l), Air pump, w/40 or 60 amp alt., 5 1/8" air pump pulley, w/Calif. emissions	F-8620-33	11.75
80-82	302 (5.0l), Air pump, w/70 or 100 amp alt., 5 1/8" air pump pulley, w/Calif. emissions	F-8620-34	11.95
80-84	302 (5.0l), Air pump, w/70 or 100 amp alt., 6 3/8" air pump pulley, w/o Calif. emissions	F-8620-39	12.15
80-85	302 (5.0l), Air pump, w/40 or 60 amp alt., 6 3/8" air pump pulley, w/o Calif. emissions	F-8620-36	12.15
81-82	302 (5.0l), Air pump, w/40 or 60 amp alt., 5 1/2"dia. air pump pulley	F-8620-34	11.95
81-82	302 (5.0l), Air pump, w/70 or 100 amp alt., 5 1/2" dia. air pump pulley	F-8620-35	12.15
83-84	302 (5.0l), Air pump, 5 7/16" dia. pulley, w/70 or 100 amp. alt.	F-8620-35	12.15
83-84	302 (5.0l), Air pump, 5 7/16" dia. pulley, w/o 70 or 100 amp. alt.	F-8620-34	11.95
85	302 (5.0l), Air pump, w/70 or 100 amp alt.	F-8620-39	12.15
73-76	302 (5.0l), Air pump, w/P/S, w/o A/C	F-8620-22	11.75
77	302 (5.0l), Air pump, w/P/S, w/o A/C	F-8620-27	11.95
80-84	302 (5.0l), Alt., w/o air pump, 70 or 100 amp. alt	F-8620-8	13.25
80-84	302 (5.0l), Alt., w/70 or 100 amp alt., w/o air pump	F-8620-17	13.60
80-84	302 (5.0l), Alt., w/air pump, w/o 70 or 100 amp alt.	F-8620-3	12.95
80-84	302 (5.0l), Alt., w/air pump, 70 or 100 amp alt.	F-8620-46	13.25
85-86	302 (5.0l), Alt., w/o 70 or 100 amp alt.	F-8620-3	12.95
85-86	302 (5.0l), Alt., w/70 or 100 amp alt.	F-8620-46	13.25
86	302 (5.0l), Alt., to air pump, w/o 70 or 100 amp alt	F-8620-36	12.15
86	302 (5.0l), Alt., to air pump, w/70 or 100 amp alt.	F-8620-37	11.95
80-84	302 (5.0l), Fan, w/o P/S	F-8620-77	19.10
85	302 (5.0l), Fan, w/o A/C or P/S	F-8620-77	19.10

73-74	302 (5.0l), Fan & air pump, w/o A/C or P/S	F-8620-21	12.95
75-76	302 (5.0l), Fan & air pump, w/o A/C or P/S	F-8620-20	14.95
77	302 (5.0l), Fan & air pump, w/o A/C or P/S	F-8620-18	15.50
69-72	302 (5.0l), Fan & alt, w/o air pump	F-8620-17	13.60
73-77	302 (5.0l), Fan & alt, w/o A/C.	F-8620-17	13.60
80-81	302 (5.0l), Fan & P/S, w/A/C..	F-8620-81	20.20
82-86	302 (5.0l), Fan & P/S, w/A/C..	F-8620-80	19.15
73-77	302 (5.0l), Fan & P/S, w/o A/C	F-8620-20	14.95
80-84	302 (5.0l), Fan & P/S, w/o A/C	F-8620-82	18.50
86	302 (5.0l), Fan & P/S, w/o A/C	F-8620-83	20.80
87	302 (5.0l), serpentine	F-8620-110	44.35
88-92	302 (5.0l), serpentine	F-8620-111	43.75
93-95	302 (5.0l), serpentine	F-8620-117	36.95
96	302 (5.0l), serpentine	F-8620-118	37.85

351M

78-79	351M (5.8l), A/C	F-8620-88	22.10
78	351M (5.8l), Air pump, 32 1/8" belt O.C.	F-8620-38	12.50
78	351M (5.8l), Air pump, 33 1/8" belt O.C.	F-8620-40	11.50
79	351M (5.8l), Air pump, w/4 3/4" dia. pulley	F-8620-40	11.50
79	351M (5.8l), Air pump, w/4" dia. pulley	F-8620-38	12.50
78-79	351M (5.8l), Alt., w/A/C, or P/S, w/o 70 amp alt.	F-8620-17	13.60
78-79	351M (5.8l), Alt., w/A/C or P/S; 70 amp alt.,	F-8620-51	12.70
78	351M (5.8l), Fan & alt, w/o A/C and P/S	F-8620-10	13.95
79	351M (5.8l), Fan & alt, w/70 amp alt, w/o A/C or P/S	F-8620-56	14.35
79	351M (5.8l), Fan & alt, w/o A/C and P/S, excl 70 amp. alt.	F-8620-10	13.95
78	351M (5.8l), Fan & P/S, w/o A/C	F-8620-88	22.10
NEW! 78	351M (5.8l), fan & P/S, w/A/C	F-8620-81	20.20
79	351M (5.8l), Fan & P/S, w/o A/C	F-8620-83	20.80
NEW! 79	351M (5.8l), fan & P/S, w/A/C	F-8620-81	20.20
78-79	351M (5.8l), Fan, w/A/C, w/o P/S	F-8620-78	19.10

351W

81	351W (5.8l), A/C	F-8620-87	22.10
82-87	351W (5.8l), A/C	F-8620-93	21.50
81-82	351W (5.8l), Air pump, 5 1/2" dia. Air pump pulley	F-8620-34	11.95
83	351W (5.8l), Air pump, w/70 or 100 amp alt.	F-8620-36	12.15
83	351W (5.8l), Air pump, w/o 70 or 100 amp alt.	F-8620-34	11.95
84	351W (5.8l), Air pump, 5 1/8" dia. pulley	F-8620-34	11.95
84	351W (5.8l), Air pump, 6 1/8" dia. pulley, w/o 70 or 100 amp. alt.	F-8620-34	11.95
84	351W (5.8l), Air pump, 6 1/8" dia. pulley, w/70 or 100 amp. alt.	F-8620-36	12.15
85	351W (5.8l), Air pump, 5 1/8" dia. pulley, w/70 or 100 amp. alt.	F-8620-36	12.15
85	351W (5.8l), Air pump, 6 1/16" dia. pulley	F-8620-34	11.95
86	351W (5.8l), Alt. to air pump, w/o 70 or 100 amp alt.	F-8620-33	11.75
87	351W (5.8l), Alt. to air pump, w/single air pump	F-8620-33	11.75
81	351W (5.8l), Alt., w/40 or 60 amp alt.	F-8620-17	13.60
81-82	351W (5.8l), Alt., w/70 or 100 amp alt	F-8620-46	13.25
82	351W (5.8l), Alt., w/o 70 or 100 amp alt.	F-8620-3	12.95
83-84	351W (5.8l), Alt., w/o air pump, 70 or 100 amp alt.	F-8620-8	13.25
83-84	351W (5.8l), Alt., w/70 or 100 amp alt., w/o air pump	F-8620-17	13.60
83-84	351W (5.8l), Alt., w/air pump, w/o 70 or 100 amp alt.	F-8620-3	12.95
83-84	351W (5.8l), Alt., w/air pump, w/70 or 100 amp alt.	F-8620-46	13.25
85-87	351W (5.8l), Alt., w/70 or 100 amp alt.	F-8620-46	13.25
85-87	351W (5.8l), Alt., w/o 70 or 100 amp alt.	F-8620-3	12.95
81	351W (5.8l), Fan & P/S, w/A/C	F-8620-83	20.80
81-84	351W (5.8l), Fan & P/S, w/o A/C	F-8620-85	20.95
82-84	351W (5.8l), Fan & P/S, w/A/C	F-8620-84	20.50
85	351W (5.8l), Fan & P/S, w/A/C	F-8620-83	20.80
85-87	351W (5.8l), Fan & P/S, w/o A/C	F-8620-85	20.95
86-87	351W (5.8l), Fan & P/S, w/A/C	F-8620-84	20.50
86-87	351W (5.8l), Fan to air pump and air pump, w/o A/C	F-8620-101	18.95
86-87	351W (5.8l), Fan to air pump and air pump, w/A/C	F-8620-100	14.70
81-82	351W (5.8l), Fan, w/A/C, w/o P/S	F-8620-76	18.90
81-86	351W (5.8l), Fan, w/o A/C or P/S	F-8620-77	19.10
88-89	351W (5.8l), serpentine	F-8620-113	40.10
90-91	351W (5.8l), serpentine	F-8620-112	41.55
92	351W (5.8l), serpentine	F-8620-113	40.10
93-95	351W (5.8l), serpentine	F-8620-119	47.50
96	351W (5.8l), serpentine, under 8500# GVW	F-8620-119	47.50

400

78-79	400 (6.6l), A/C	F-8620-88	22.10
78	400 (6.6l), Air pump, 32 1/8" belt O.C.	F-8620-38	12.50
78	400 (6.6l), Air pump, 33 1/8" belt O.C.	F-8620-40	11.50
79	400 (6.6l), Air pump, w/4" dia. pulley	F-8620-38	12.50
79	400 (6.6l), Air pump, w/4 3/4" dia. pulley	F-8620-40	11.50
78-79	400 (6.6l), Alt., w/A/C or P/S, w/o 70 amp alt.	F-8620-17	13.60
78-79	400 (6.6l), Alt., w/A/C or P/S; 70 amp alt.	F-8620-51	12.70
78	400 (6.6l), Fan & alt, w/o A/C and P/S	F-8620-10	13.95
79	400 (6.6l), Fan & alt, w/o A/C and P/S, excl 70 amp. alt.	F-8620-10	13.95
79	400 (6.6l), Fan & alt, w/70 amp alt, w/o A/C or P/S	F-8620-56	14.35
78	400 (6.6l), Fan & P/S, w/o A/C	F-8620-88	22.10
NEW! 78	400 (6.6l), Fan & P/S, w/A/C.	F-8620-81	20.20
78-79	400 (6.6l), Fan & P/S, w/A/C..	F-8620-81	20.20
79	400 (6.6l), Fan & P/S, w/o A/C	F-8620-83	20.80
NEW! 79	400 (6.6l), Fan & P/S, w/A/C..	F-8620-81	20.20
78-79	400 (6.6l), Fan, w/A/C, w/o P/S	F-8620-78	19.10

ENGINE

A 6019 Timing cover
B 6020 Gasket & front seal, timing cover
C 6051 Head gasket
D 6600 Oil pump
E 6622 Oil pump pickup
F 6675 Oil pan
G 6730 Drain plug, oil pan
H 6731 Oil filter
J 6734 Gasket, oil pan plug
K 6750 Dip stick
L 6754 Dip stick tube
M 6766 Oil breather cap
N 6781 Gasket set, oil pan
O 8255 Gasket, thermostat hsg
P 8501 Water pump
Q 8507 Gasket, water pump
R 8575 Thermostat
S 8592 Thermostat housing
T 9430 Exhaust manifold
U 9433 Gasket set, intake manifold
V 9447 Gasket, carb spacer
W 9A586 Carb spacer
X 10884 Temp sender
Items in blue-check listings for applications.

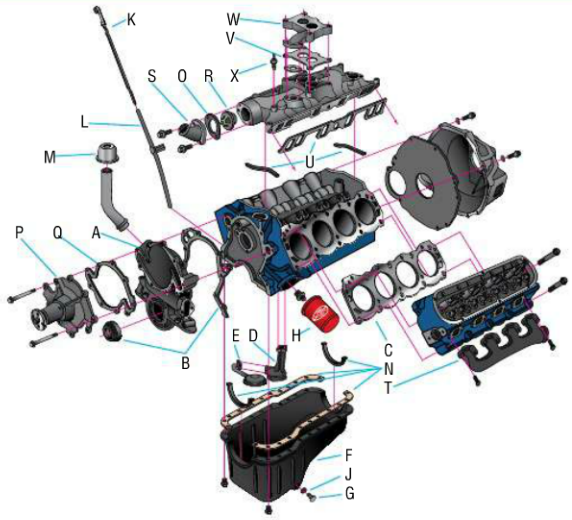

ENGINE SECTION INFORMATION

Bolt kits.....pg 54
Motor/trans mounts...pg 54
Oil/Lubrication .....pg 55
Rod/piston .....pg 57
Head/valve train .....pg 57
PCV.....pg 59
Engine gaskets .....pg 60
Engine Swap kits ..... pg 54
Block ..... pg 55
Crankshaft ..... pg 57
Camshaft..... pg 57
Valve cover..... pg 58
Smog pump ..... pg 60
Engine rebuild parts .. pg 61

Some abbreviations found in this section (alphabetical-read across):

chrg .. charge (core charge) | dia. ..... diameter
ev/em evaporative emissions | excl ..... excluding
GVW.. Gross vehicle weight | incl..... includes
l.. litre (metric engine size) | LH..... drivers side
mm.....millimeter | OE.Original equipment style
pc (s).....Piece (s) | Repl'mt .....Replacement
reqd ..... Required | reqs.....Requires
RH.....passenger side | ser#.....serial number
w/..... Used with | W/o ..... Used without
pounds-when used following a number (8500#= 8500 pounds)

A complete listing of abbreviations may be found at the rear of this catalog.

BOLT KITS



ENGINE DRESS-UP BOLT KIT

Inc's intake manifold, valve cover, thermostat housing, fuel pump, timing cover, oil pan, distributor holddown, exhaust manifold or header. Water pump and fuel injection bolts not inc'd.

SPECIAL BOLT KITS-ENGINE



		Chrome Hex Head (A)		Polished S.S. Hex Head (B)		Chrome Plated Allen Head (C)		Polished S.S. Allen Head (D)		Polished S.S. Button Head (F)	
6000	*BOLT KIT, Engine Dress Up*	*Part #*	*Price*	*Part #*	*Price*	*Part #*	*Price*	*Part #*	*Price*	*Part#*	*Price*
65-86	289, 302, w/std exh manifolds	6000-1KA	65.95	6000-1KB	66.95	6000-1KC	53.50	6000-1KD	86.95	6000-1KF	72.95
65-86	289, 302, w/headers	6000-2KA	65.95	6000-2KB	66.95	6000-2KC	47.95	6000-2KD	82.95	6000-2KF	68.95
6019	*BOLT KIT, Timing Cover*										
Does not inc. water pump bolts.											
65-86	289, 302, 351W	6019-1KA	6.25	6019-1KB	5.50	6019-1KC	5.20	6019-1KD	9.10	6019-1KF	7.10
6583	*BOLT KIT, Steel Valve Cover*										
65-86	289, 302, 351W	6583-1KA	11.30	6583-1KB	8.45	6583-1KC	7.65	6583-1KD	13.95		
6583	*BOLT KIT, Alum. Valve Cover*										
65-86	289, 302, 351W	6583-2KA	11.30	6583-2KB	8.95	6583-2KC	8.45	6583-2KD	14.25	6583-2KF	9.95
6676	*BOLT KIT, Oil Pan*										
65-86	289, 302	6676-1KA	20.95	6676-1KB	16.50	6676-1KC	15.95	6676-1KD	26.50	6676-1KF	18.50
7A194	*BOLT KIT, Trans Pan*										
65-73	C4	7A194-1KA	11.15	7A194-1KB	9.10	7A194-1KC	8.20	7A194-1KD	14.45	7A194-1KF	10.50
65-96	C6	7A194-2KA	17.25	7A194-2KB	14.45	7A194-2KC	13.50	7A194-2KD	24.50	7A194-2KF	17.25
8592	*BOLT KIT, Water Neck*										
65-86	289, 302, 351W	8592-1KA	2.80	8592-1KB	1.95	8592-1KC	1.95	8592-1KD	2.99	8592-1KF	2.15
9351	*BOLT KIT, Fuel Pump (mechanical)*										
65-86	289, 302, 351W	9351-1KA	2.85	9351-1KB	1.95	9351-1KC	2.25	9351-1KD	2.60	9351-1KF	2.60
9425	*BOLT KIT, Intake Manifold*										
65-86	289, 302	9425-1KA	13.40	9425-1KB	15.35	9425-1KC	12.95	9425-1KD	23.25		
9432	*BOLT KIT, Exhaust Manifold*										
65-86	289, 302, 351W	9432-1KA	20.50	9432-1KB	24.95	9432-1KC	17.50	9432-1KD	34.50		
65-73	289, 302, 351W, w/headers	9432-2KA	24.50	9432-2KB	16.50	9432-2KC	10.70	9432-2KD	21.50		

FREE UPS SHIPPING on orders over $300

SWAP KITS



ENGINE SWAP KITS

78-79 To put in a 429 or 460. No welding. Brackets only, req's motor mount shells from a 460 truck-usually found in the salvage yard F-6001-5 85.95

78-79 Motor mounts for above kit, 2 reqd F-6038-8 23.95

MOTOR MOUNTS/SUPPORTS

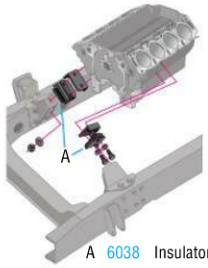

A 6038 Insulator

Items in blue-check listings for applications.

6038 INSULATOR, Engine Motor Mount

One piece required unless noted otherwise.



6 cylinder engines

80-84	300 (4.9l), RH	F-6038-10B	25.50
80-84	300 (4.9l), LH	F-6038-10A	23.95
85-88	300 (4.9l), RH	F-6038-11B	28.95
85-88	300 (4.9l), LH	F-6038-11A	32.50
89-92	300 (4.9l), hydraulic, 2 reqd, original style	F-6038-17	37.95
89-92	300 (4.9l), solid, 2 reqd, replacement for hydraulic mount	F-6038-17A	24.95



8 cylinder engines

66-68	289, 2 reqd	F-6038-7	14.95
69-86	302 (5.0l), 2 reqd	F-6038-7	14.95
87-96	302 (5.0l), 2 reqd	F-6038-12	26.50
78-79	351M (5.8l), RH	F-6038-8B	15.50
78-79	351M (5.8l), LH	F-6038-8A	15.50
80-86	351W (5.8l), 2 reqd	F-6038-7	14.95
87-96	351W (5.8l), 2 reqd	F-6038-12	26.50
78-79	400 (6.6l), RH	F-6038-8B	15.50
78-79	400 (6.6l), LH	F-6038-8A	15.50

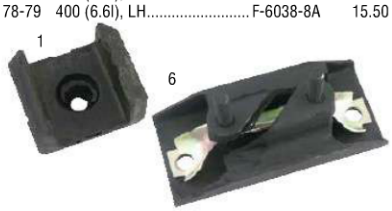

6068 REAR INSULATOR, Transmission

One piece required unless noted otherwise.

6 cylinder engines.

66-68	170, rebound rear, 2 reqd	F-6068-1	6.95
85-86	300 (4.9l), at trans	F-6068-6	16.50
87-92	300 (4.9l), at trans	F-6068-8	25.95

8 cylinder engines

66-68	289, at trans	F-6068-6	16.50
69-79	302 (5.0l), at trans	F-6068-6	16.50
80-84	302 (5.0l), at trans	F-6068-6	16.50
85-86	302 (5.0l), excl EFI, at trans	F-6068-6	16.50
88-93	302 (5.0l), (from 10/5/87), at trans	F-6068-8	25.95
94-96	302 (5.0l), at trans	F-6068-21	75.00
78-79	351M, 400, part time 4wd, at trans	F-6068-3	12.95
80-86	351W (5.8l), at trans	F-6068-6	16.50
88-89	351W (5.8l), (from 10/5/87), at trans	F-6068-8	25.95
90-93	351W (5.8l), at trans	F-6068-8	25.95
94-96	351W (5.8l), at trans	F-6068-21	75.00

BLOCK

6A008 DOWEL SET, Block

66-96	289, 302, 351W, set 4, block to head	T-6A008-1	6.95

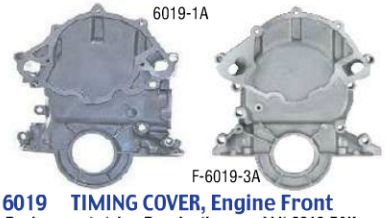

6019 TIMING COVER, Engine Front

Replacement style. Require the use of kit 6019-5AK below.

66-67	289, w/cast in pointer, repro, from 6/65 using cast iron water pump	6019-1A	99.95
68-79	289, 302, w/bolt on timing pointer, repro	6019-2A	99.95

Original style:

80-86	302, 351W, dip stick in timing cover, std. rotation	F-6019-2A	137.95
87-96	302, 351W, dip stick in oil pan, reverse flow pump (uses serpentine belt)	F-6019-3A	137.95

6019 MOUNTING KIT, Timing Cover

66-79	Fits 6019-1A, 2A covers above	6019-5AK	10.00

6023 POINTER, Timing

66-72	289, 302, 351W	6023-1A	7.95

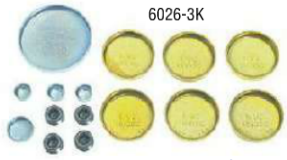

6026 FREEZE PLUG KIT, Premium Style

With brass block plugs for corrosion resistance

65-74	170, 200, w/ 1 3/4" block plugs, 10 pcs	6026-2K	14.95
87-96	300, 7 pc	F-6026-3K	16.80
66-96	289, 302, 7 pcs	6026-3K	11.95
78-79	351C/351M, 400, 11 pc	6026-4K	16.80
68-96	351W, 15 pc	6026-3K	11.95

6345 BOLT, Main Bearing Cap

68-79	302, 9-10 reqd, 7/16"-14 x 3 5/32"	6345-2	7.72



8115 DRAIN COCK, Engine

66-80	W/ 1/4" pipe thread	8115-1	1.95

LUBRICATION/OIL PUMP



6600 OIL PUMP ASSY

66-74	170, 200	6600-4	64.60
66-96	289, 302 (5.0l), standard	6600-2	43.60
66-96	289, 302 (5.0l), Hi-vol. (incl shaft)	6600-2A	71.50
80-96	351W (5.8l)	6600-7	52.95
80-96	351W (5.8l), Hi-volume	F-6600-17A	103.50
78-79	351M, 400	6600-8	61.75
78-79	351M, 400, Hi-volume	F-6600-16A	80.50

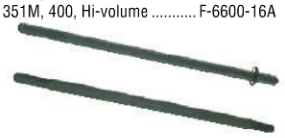

6A618 SHAFT, Oil Pump Drive Standard

66-74	170, 200	6A618-1	9.50
80-92	300 (4.9l)	F-6A618-9	8.70
66-86	289, 302 (5.0l), excl EFI	6A618-2	8.35
87-96	302 (5.0l) EFI	F-6605-10	5.95
78-79	351M, 400	F-6A618-16	8.55
80-96	351W (5.8l)	6A618-3	8.55

6605 SHAFT, Oil Pump Drive Heavy Duty

Special oversize diameter, chrome moly steel resists bending and twisting commonly associated with standard shafts under severe duty or heavy viscosity oils.

66-86	289, 302 (5.0l), excl EFI	6A618-2A	CALL
87-96	302 (5.0l) EFI	F-6605-10A	20.25
78-79	351M, 400	6A618-4A	CALL
80-96	351W (5.8l)	6A618-3A	20.25



6642 OIL COOLER KIT, Engine

Heavy duty version is 7.5" x 17" x 3/4" with a black powder coated finish. It's installation kit includes a thermostatically controlled oil filter adapter that allows the engine to warm up to a preset temperature before oil is allowed to flow through the cooler.

Super heavy duty version is 10" x 16" x 3 7/8" and includes an integrally mounted 10" reversable fan that flows 650cfm of air. The core is black powder coated and requires installation kit F-6A642-1 below.

Both coolers will fit most engines that use the FL-1A or FL-300 style oil filters.

	Heavy duty, incl installation kit	F-6642-2	92.95
	Super heavy duty	F-6642-3	149.95
	Installation kit for F-6642-3	F-6A642-1	58.95
	Temperature switch activates F-6642-3 at 180 degrees, off at 170	F-6A642-3A	25.75



6675 OIL PAN, Replacement

66-77	289, 302, repro from Ford blueprints, screw-in oil tube mount	F-6675-8	CALL
80-82	4.9l	F-6675-3	94.95
83-92	4.9l, will fit 83-86's if used with 87-92 gasket	F-6675-2	94.95
80-96	5.0l	F-6675-1	82.95
81	5.8l, Calif.	F-6675-4	94.95
82-87	5.8l	F-6675-4	94.95
88-96	5.8l	F-6675-5	94.95



6687 WINDAGE TRAY, Oil Pan

Special design increases horsepower by protecting crankshaft from whipping through the oil in the pan. An original Ford horsepower trick!

66-96 289, 302; includes tray, 4 special main cap bolts, 4 attaching bolts. Tray must be modified if used in rear sump oil pans or vehicles with rack and pinion steering. 6687-1K 74.00

80-96 351W (5.8l), incl main cap bolts F-6687-3 119.95

6731 OIL FILTER



1A



1B

66 Red Rotunda R-1A, concours 6731-1A 31.95

66 Gold Rotunda, 6000 mile 6731-1B 29.95



2A



2B

67 White w/Red "Autolite" and star embossed top, duplicate of original filter 6731-2B 29.95

67-71 White w/Red "Autolite" embossed top, duplicate of original filter 6731-2A 29.95



66-96 Spin-on filter, "Motorcraft" FL-1A 6731-2 5.95



66-96 K&N performance Gold Premium Oil Filter. 10-20 micron filtering capability, flows 12-16 gpm, 90% efficiency. FL-1, FL-1A equivalent. 6731-50 12.95



6730 PLUG, Oil Pan Drain

Includes gasket. Part numbers with an "A" suffix are magnetic to trap metal particles before they can damage your engine. Just wipe clean with each oil change.

66-96 6 & 8 cyl., 1/2"-20 ..... F-6730-2 1.99

66-96 6 & 8 cyl., 1/2"-20, magnetic . F-6730-2A 2.95

66-96 6 & 8 cyl., 1/2"-20, chrome.... F-6730-2B 2.50

6734 GASKET, Oil Drain Plug

66-96 All eng's w/ 1/2" bolt, special aluminum, pair F-6734-2 1.99

85-96 All eng's w/ M14-1.5 metric bolt, special aluminum, pair F-6734-3 1.99

6750 DIP STICK, OIL LEVEL

NEW! 66-73 170, 200, repro, incl tube..... 6750-13 24.95

66-77 289, 302, repro, chrome, see also tube F-6754-2A F-6750-2A 16.95

6754 TUBE, DIP STICK, ENGINE OIL

66-77 289, 302, repro, chrome, see also dip stick F-6750-2A F-6754-2A 24.95





9278 SENDING UNIT, Oil Pressure

66-89 W/oil gauge 9278-2 14.75

66-89 W/oil gauge, stamped "No. 90"", spade type wire connector 9278-2A 39.95

73-96 302, w/light 9278-4 8.95

NEW! 78-79 351M, 400, spade terminal 9278-4 8.95

NEW! 80-82 5.0l, 5.8l W, spade terminal.... 9278-4 8.95

NEW! 80-87 4.9l, w/ oil light, threaded stud terminal 9278-3 11.60

NEW! 80-87 8 cyl gas, w/ oil gauge, originals stamped "no. 90", threaded stud wire connector. 9278-2 14.75

NEW! 83 5.0l, spade terminal..... 9278-4 8.95

NEW! 84 5.8l, spade terminal..... 9278-4 8.95

NEW! 84-85 5.0l, 5.8l, spade terminal..... 9278-4 8.95

NEW! 88 5.0l, 5.8l, w/ oil light, spade terminal 9278-4 8.95

NEW! 88 5.0l, 5.8l, w/ oil gauge, originals stamped "no. 90", threaded stud wire connector. 9278-2 14.75

90-96 All V-8, w/gauge..... F-9278-10 15.95

Items in blue-check listings for applications.

A 6108 Piston
B 6135 Wrist pin, piston
C 6148 Ring set, piston
D 6200 Rod, connecting
E 6211 Bearing, conn rod
F 6212 Nut, conn rod
G 6214 Bolt, conn rod
H 6250 Camshaft
J 6A251 Bearings, cam
K 6256 Gear, camshaft
L 6A259 Nut, rocker arm
M 6268 Timing chain
N 6269 Thrust plate, cam
O 6287 Eccentric, fuel pump
P 6306 Gear, crankshaft
Q 6310 Oil slinger
R 6312 Pulley, crankshaft
S 6316 Damper/balancer
T 6333 Bearings, main
U 6345 Bolt, main bearing cap
V 6375 Flywheel/flexplate
W 6378 Washer, crankshaft
X 6500 Lifter, valve
Y 6505 Valve, exhaust
Z 6507 Valve, intake
A1 6514 Fulcrum, rocker arm
B1 6518 Keeper, valve spring
C1 6514 Retainer, valve spring
D1 6513 Valve spring
E1 6524 Deflector, rocker arm
F1 6A527 Stud, rocker arm
G1 6564 Rocker arm
H1 6565 Pushrod
J1 6571 Seal, valve
K1 6600 Oil pump
L1 6A618 Shaft, oil pump
M1 6622 Pickup/screen, oil pump
N1 6626 Gasket, pickup
O1 6659 Gasket, oil pump
P1 6700 Seal, front cover
Q1 6701 Seal, crankshaft rear main
R1 377850-S Bolt, crankshaft
S1 6379 Bolt, flywheel
T1 7600 Pilot bearing

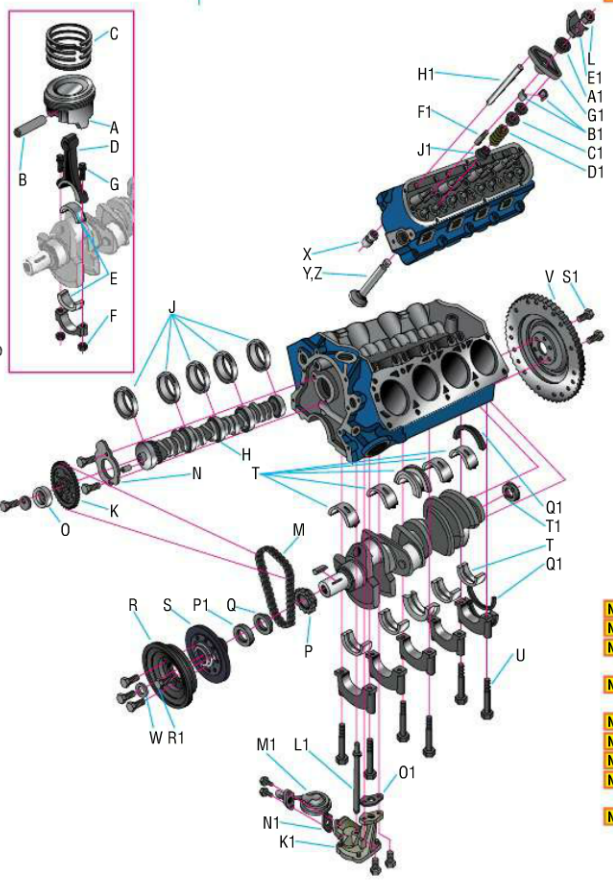



9B339 FITTING, Oil Pressure Sending Unit

66-68	289, w/gauge, OE zinc	9B339-1	24.95
66-68	289, w/gauge, chrome	9B339-1A	24.95
69-77	289, 302, w/gauge, OE zinc	9B339-2	14.95

CRANKSHAFT

See also engine rebuild section.

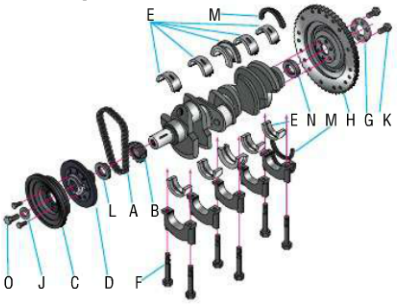

A 6268 Timing chain
B 6306 Gear, crankshaft
C 6312 Pulley, crankshaft
D 6316 Damper/balancer
E 6333 Bearings, crankshaft main
F 6345 Bolt, main bearing cap
G 6A366 Plate, flywheel reinforcement
H 6375 Flywheel/flexplate
J 6378 Washer, crankshaft
K 6379 Bolt, flywheel
L 6700 Seal, front cover
M 6701 Seal, crankshaft rear main
N 7600 Pilot bearing, crankshaft
O 377850-S Bolt, crankshaft
Items in blue-check listings for applications.



6316 HARMONIC BALANCER, Replacement

Limited lifetime mfgr warranty on many balancers, others are 1-2 years.

66-73	170, 200	6312-1A	98.50
66-68	289, 3 bolt, pulley recess	6316-1A	99.95
82-92	300 (4.9l), triple pulley	F-6316-1	124.95
80-81	300 (4.9l), California	F-6316-1	124.95
68	302, 3 bolt, pulley recess	6316-3A	158.95
69	302, 3 bolt, w/pulley lip	6316-2A	149.95
70-73	302, 6.5" O.D., 4.125" h, 4 bolt, w/pulley lip	6316-4A	99.95
80	302 (5.0l)	F-6316-5	117.95
81	302 (5.0l), excl Calif.	F-6316-4	134.95
84-95	302 (5.0l)	F-6316-3	73.95
78-79	351M, balancer ID#'s D2AE-CA, D5AE-AA/BA, D7TZ-AA/BA	F-6316-7	101.95
81	351W (5.8l)	F-6316-11	117.95
82-85	351W (5.8l), w/o EEC	F-6316-11	117.95
86-87	351W (5.8l)	F-6316-11	117.95
88-96	351W (5.8l)	F-6316-6	114.95
78	400, balancer ID#'s D2AE-CA, D7TZ-AA/BA	F-6316-7	101.95



377850 BOLT/WASHER, Crankshaft Damper

66-96	289, 302	377850-S	4.00



6375 M/T FLYWHEEL & A/T FLEXPLATE

Heavy duty billet steel meets SFI certification 1.1 for racing applications. 289, 302, 351W:

66-69	157 tooth, 28 oz. imbalance, fits 10/10.5" long or 10.5" Ford diaphragm style clutches	6375-1	358.50
70-80	164 tooth, 28 oz. imbalance, fits 11" long or 10.5" diaphragm style clutches	6375-7A	397.95
81-96	157 tooth, 50 oz. imbalance, fits 10/10.5" long or 10.5" Ford diaphragm style clutches	6375-1A	358.50

Standard Replacement Flywheels (Manual Transmission)

77-80	302 (5.0l), 164t, 14.25" O.D., 11" clutch	F-6375-6	164.95
81-96	302 (5.0l)	F-6375-23	199.95
78-79	351M, 400, 180t, 15.512" O.D.	F-6375-29	164.95
82-93	351W (5.8l), 164t, 14.25" O.D., 11" clutch	F-6375-6	164.95
94-96	351W (5.8l)	F-6375-24	425.00

Standard Replacement Flexplates (Automatic Transmission)

66-74	170, 200	6375-2	39.95
80-81	300, excl C6, 164t, 14.23" O.D.	6375-16A	47.95
80-81	300, excl C6, 164t, 14.23" O.D., 11 7/16" conv'r bolt circle, orig., Ltd NOS stock	F-6375-14A	99.95
82-94	302, w/AOT, 164t, 14.23" O.D.	6375-19	47.95
66-68	289, 302, 157t, 13.3" O.D.	6375-9A	84.95
69-85	289, 302, 351, excl C6, 164t, 14.23" O.D.	6375-11A	54.50
83-90	300 AOT, C5, 164t, 14.23" O.D.	F-6375-10	49.95
80-92	300 w/C6, 164t, 14.23" O.D.	F-6375-19	49.95
80	302, 351W, w/C6, 164t, 14.23" O.D., gear is flush to lip opposite weight side	6375-5A	55.95
81-96	302, C6, 164t, 14.23" O.D.	F-6375-21	49.95
81-96	351W, w/C6, 164t, 14.23" O.D., gear is flush to lip opposite weight side	6375-5A	55.95
78-79	351M, 400, w/C6, 164t, 14.23" O.D., gear is flush to lip opposite weight side	F-6375-18	49.95





6376 SHIM, Flywheel

Req'd for vehicles using hydraulic clutches, excessive material removal may cause clutch release problems. These restore flywheel alignment. Do not use more than .050" of shims.

80-96	W/hyd. clutch, .025"	F-6376-1A	15.25
80-96	W/hyd. clutch, .050"	F-6376-1B	15.25

6379 BOLT, Flywheel/Flexplate

66-68	289, M/T or A/T	6379-1	1.75
68-73	302, M/T, A/T w/plate	6379-1	1.75
68-73	302, A/T w/o plate	T-6379-2	4.16

See transmission section for 7600 Pilot bearings.

ROD/PISTON

See engine rebuild section for listings.

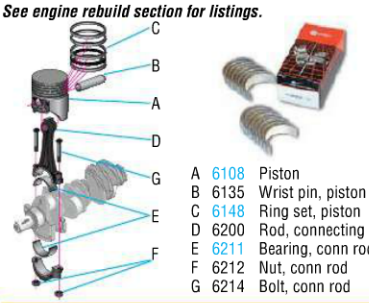

A 6108 Piston
B 6135 Wrist pin, piston
C 6148 Ring set, piston
D 6200 Rod, connecting
E 6211 Bearing, conn rod
F 6212 Nut, conn rod
G 6214 Bolt, conn rod

CAMSHAFT

See also engine rebuild section.

A 6250 Camshaft
B 6A251 Bearings, cam
C 6256 Gear, cam
D 6026 Plug, freeze
E 6268 Timing chain

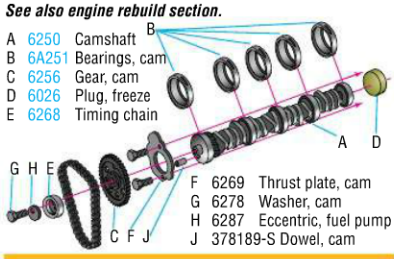

F 6269 Thrust plate, cam
G 6278 Washer, cam
H 6287 Eccentric, fuel pump
J 378189-S Dowel, cam

HEAD/VALVE TRAIN

See also engine rebuild section.

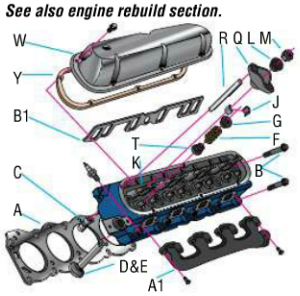

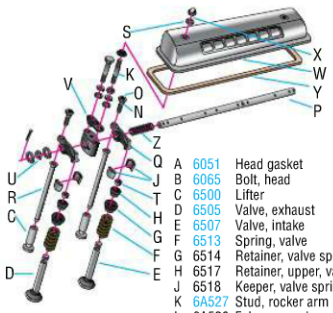

A 6051 Head gasket
B 6065 Bolt, head
C 6500 Lifter
D 6505 Valve, exhaust
E 6507 Valve, intake
F 6513 Spring, valve
G 6514 Retainer, valve spring
H 6517 Retainer, upper, valve spring
J 6518 Keeper, valve spring
K 6A527 Stud, rocker arm
L 6A528 Fulcrum, rocker arm
M 6A529 Nut, rocker arm
N 6549 Screw, rocker arm adjusting
O 6552 Lock nut, rocker arm screw
P 6563 Shaft, rocker arm
Q 6564 Rocker arm
R 6565 Push rod
S 6570 Grommet, valve cover
T 6571 Seal, valve stem
U 6572 Plug, rocker shaft
V 6575 Bracket, rocker arm shaft
W 6582 Valve cover
X 6583 Nut/washer, valve cover
Y 6584 Gasket, valve cover
Z 6587 Spring, rocker shaft
A1 9430 Exhaust manifold
B1 9433 Gasket, Intake

Items in blue-check listings for applications.

6A008 DOWEL SET, Cylinder Head

66-96 170, 200, 289, 302, 351, 400, set of 4 ..... T-6A008-1 6.95

6065 BOLT, Cylinder Head

66-96 289, 302, replacement style, 7/16"-14 x 3 29/32", 10 reqd 6065-1C 2.40

66-89 302, concours, (20) long and short bolts with "F" head marking as original 6065-1AK 60.00

VALVE COVER

6570 GROMMET, Steel Valve Cover

NEW! 80-92 300, push rod cover grommet, integral washer T-6570-1 2.65



66-74 170, 200, custom chrome 6582-21 39.50

NEW! 66-70 170, 200, chrome, OE repro ... 6582-21B 62.95

NEW! 71-74 170, 200, replacement, works but not correct, chrome, repro 6582-21B 62.95

NEW! 66-70 170, 200, blue, OE repro 6582-21A 54.95

NEW! 71-74 170, 200, replacement, works but not correct, blue, repro 6582-21A 54.95



80-92 300, chrome F-6582-11 39.95



66-88 289, 302, 351W; excl EFI, "COBRA" black wrinkle, finned aluminum, pair 6A582-1-2 244.95

66-88 289, 302, 351W, excl EFI, finned aluminum, "Cobra", polished, fits roller rockers without modification 6A582-1-2P 209.95



66-86 289, 302, 351W, excl EFI, polished billet aluminum, flames, tall style will clear roller rockers 6582-18 94.95



66-88 289, 302, 351W, excl EFI, finned aluminum, "Cobra", natural finish, open letters and polished fins 6A582-1-2A 264.95



Finned aluminum, fits most roller rockers without modification. "Powered By Ford"

66-68 "289" black wrinkle finish 6A582-2A 148.95

66-68 "289" polished 6A582-2AP 222.95

68-88 Excl EFI, "302" black wrinkle finish 6A582-3A 148.95

68-88 Excl EFI, "302" polished 6A582-3AP 229.95

69-88 Excl EFI, "351" black wrinkle finish 6A582-4A 159.95

69-88 Excl EFI, "351" polished 6A582-4AP 233.50



66-88 289, 302, 351W, excl EFI, "Bronco Powered By Ford", pair F-6A582-5A 179.95



66-86 289, 302, 351W, excl EFI, chrome, pair 6582-22A 33.95

66-86 As above, chrome "Hipo" style, pair 6582-20A 79.95



66-86 260, 289, 302, 351W, excl EFI, steel, pair 6582-20 57.95



86-96 5.0l, 5.8l, w/EFI, finned aluminum w/black wrinkle paint and "Ford Motorsport" logo, pair F-6582-17 192.95



78-79 351M, 400, chrome, pair 6582-23A 39.95



78-79 351M, 400, "Ford Racing" chrome steel, pair F-6582-6 72.95



78-79 351M, 400, "Ford Racing" polished aluminum, pair F-6582-7 174.95



429, 460, excl EFI, chrome, pair F-6582-15 44.95



6582 DRESS UP KIT, Engine

Chrome, incl valve covers, breathers, hold down wing nuts and tabs, and grommets.

66-86 289, 302, 351W, excl EFI 6582-17A 83.95

78-79 351M, 400 ..... F-6582-13A 119.95

6583 WING NUT SET, Valve Cover Hold-down

66-96 Chrome, 2 pc, 1/4"-20 threads, each F-6583-2K 1.75

66-96 Chrome, 2 pc, 5/16"-18 threads, each F-6583-3K 1.75

6583 BOLT KIT, Chrome Valve Cover

66-96 Chrome, 1/4"-20 x 3/4" hex head, set of 4 ..... 6582-2K 4.85

6583 BOLT KIT, Valve Cover

OE Style Standard

66-79 170, 200, 289, 302, 351, 400, w/steel valve covers, concours, 1/4"-20 threads, (12) 6582-1CK 12.00

66-86 289, 302, 351W, w/Cobra alum. VC, excl EFI, concours, "RBW" 6582-1AK 12.00

Chrome hex head

68-86 289, 302, 351W:
steel valve cover 6583-1KA 11.30
aluminum valve cover 6583-2KA 11.30

78-79 351M, 400:
steel valve cover 6583-3KA 14.95
aluminum valve cover 6583-4KA 14.95

Polished stainless steel hex head

68-86 289, 302, 351W:
steel valve cover 6583-1KB 8.45
aluminum valve cover 6583-2KB 8.95

78-79 351M, 400:
steel valve cover 6583-3KB 11.95
aluminum valve cover 6583-4KB 12.10

Chrome allen head

68-86 289, 302, 351W:
steel valve cover 6583-1KC 7.65

78-79 351M, 400:
steel valve cover 6583-3KC 11.55
aluminum valve cover 6583-4KC 11.95

Polished stainless steel allen head

68-86 289, 302, 351W:
steel valve cover 6583-1KD 13.95
aluminum valve cover 6583-2KD 14.25

78-79 351M, 400:
steel valve cover 6583-3KD 18.75
aluminum valve cover 6583-4KD 19.50



6766 BREATHER/FILLER CAP, Engine Oil

Arranged by year and engine size. Most are original design and/or Motorcraft parts.

66-68	170, w/TE, chrome, closed emissions, push-on, early style w/"FoMoCo" script logo	6766-8B	33.50
66-67	All, push-on, non-emission, black, repro	6766-2	12.95
66-67	All, push-on, non-emission, chrome, repro	6766-5	15.95
66-67	All, push-on, emission, black, repro	6766-3	16.50
66-67	All, push-on, emission, chrome, repro	6766-6	16.95
68-70	All, push-on, emission, chrome, repro	6766-8A	24.95
70-73	Replacement, twist-on, non-emission, chrome	6766-7	10.95
66-68	170, w/TE, closed emissions, chrome, push-on, emission, late style w/"FoMoCo" block logo	6766-8A	24.95
84-92	300 (4.9l)	F-6766-21	6.95
86-96	302 (5.0l), w/o filler pipe	F-6766-21	6.95
83-86	351W (5.8l), w/filler pipe	F-6766-17	39.95
87-96	351W (5.8l), w/o filler pipe	F-6766-21	6.95
65-86	Use with 6582-17A, F-6582-13A, 21, 22A, 23A, 24A, non-emission style, chrome	6766-17C	3.75
65-86	As above, emission stlye	6766-17A	5.95

PCV SYSTEM



6767 ELBOW, Valve Cover & Oil Cap

NEW! 69-86	90˚, repro, metal, zinc dichromate	6767-2A	11.95
NEW! 69-86	300, 302, 351, 400, top of filler cap, 90˚, black plastic	6767-1	9.99
NEW! 80	302, PCV hose to valve cover, 90˚	F-6767-1	4.95



6A892 GROMMET, PCV

66-70	All. excl 351W, or alum VC	6A892-1	1.87
	W/aluminum valve covers having notched hole	6A892-3	2.95
	Use w/6582-17A or 6582-21 valve covers	6A892-4A	1.25
	W/Cobra valve covers	6A892-5	4.25
NEW! 80-84	300, 1 7/16" O.D. x 37/64" I.D.	6A892-B	1.50
NEW! 80-89	302, 351W, 1 7/16" O.D. x 37/64" I.D.	6A892-B	1.50



6A664 PCV HOSE, Carb Spacer

66-68	289, 302, repro	6A664-1A	9.95
	351M, made long, cut to length	6A664-4A	19.95

6A664 CLAMP KIT, PCV Hose

66-73	7/8" breather hose clamp, cad plated, (2)	6A664-2K	1.00



6A664 PCV HOSE, Air Cleaner

Breather cap to air cleaner can. Long enough for most applications, cut to length as reqd. may not fit all applications.

66-74	W/FoMoCo logo	6A664-6A	11.95



6A666-1A 6A666-1 6A666-2

6A666 PCV, VALVE, Replacement

66-73	170, 200, plastic body, Motorcraft	6A666-1	10.75
66-73	170, 200, original style metal body, repro	6A666-1A	7.50
NEW! 66-68	170, replacement	F-6A666-9A	4.28
NEW! 69	170, replacement	F-6A666-9A	4.28
NEW! 70-71	170, 200, replacement	F-6A666-9A	4.28
NEW! 72	170, 200, 3/8" hose, replacement	F-6A666-9A	4.28
NEW! 72	200, 1/2" hose, replacement	6A666-2	6.35
NEW! 73-75	200, replacement	F-6A666-9A	4.28
NEW! 86-89	4.9l, replacement	F-6A666-5A	4.78
66-72	289, 302, 351, Motorcraft	6A666-2	6.35
NEW! 66-72	289, 302, replacement	6A666-3	6.80
NEW! 66-72	289, 302, replacement	6A666-2	6.35
73-77	302, Motorcraft	6A666-4	8.80
NEW! 73-74	302, w/o thermactor emissions, replacement	F-6A666-1A	5.50
NEW! 74	302, w/ thermactor emissions , replacement	F-6A666-2A	3.42
NEW! 75-76	302, replacement	F-6A666-1A	5.50
NEW! 77-78	302, 351, low flow, replmt	F-6A666-1A	5.50
NEW! 81-82	5.0l, high altitude, replmt	F-6A666-7A	3.56
NEW! 81-82	5.0l, excl high altitude, replmt	F-6A666-5A	4.78
NEW! 80	5.0l, excl Canada, replmt	F-6A666-4A	4.64
NEW! 80	5.0l, Canada, replmt	F-6A666-1A	5.50
NEW! 83	5.0l, unleaded fuel, excl Canada, replmt	F-6A666-4A	4.64
NEW! 83	5.0l, leaded fuel, Canada, replmt	F-6A666-1A	5.50
NEW! 84	5.0l, excl Canada, replmt	F-6A666-4A	4.64
NEW! 84-85	5.0l, Canada, replmt	F-6A666-1A	5.50
NEW! 85	5.0l 2v, excl Canada, replmt	F-6A666-4A	4.64
NEW! 85	5.0l EFI, replmt	F-6A666-1A	5.50
NEW! 86	5.0l, 2v or 4v, replmt	F-6A666-4A	4.64
NEW! 86	5.0l EFI, replmt	F-6A666-1A	5.50
NEW! 87-96	5.0l, replacement	F-6A666-12A	4.26
NEW! 79	351, replacement	F-6A666-1A	5.50
NEW! 80	5.8l, replacement	F-6A666-1A	5.50
NEW! 81	5.8l, excl high altitude, replmt	F-6A666-1A	5.50
NEW! 83-85	5.8l W, 4v or EFI, excl high altitude, replacement	F-6A666-1A	5.50
NEW! 87	5.8l, replacement	F-6A666-1A	5.50
NEW! 88-89	5.8l 4v, replacement	F-6A666-4A	4.64
NEW! 88-96	5.8l EFI, replacement	F-6A666-1A	5.50

6758 PCV LINE, PreBent Rigid

NEW! 78-79	351-4v, carbon steel	F-6758-2	15.95
NEW! 78-79	351-4v, stainless steel	F-6758-2S	17.95



9D697 FILTER, PCV Air Cleaner

70-77		9D697-1	3.70

SMOG PUMP



9A486 SMOG AIR PUMP, Rebuilt

Note core charge of $60.00 for each pump unless noted otherwise.

74	200	F-9A486-2	99.50
80	300 (4.9l)	F-9A486-2	99.50
81-84	300 (4.9l)	F-9A486-3	99.50
85-86	300 (4.9l), ID#'s E1TE-C1A, C2A, D1A, D2A	F-9A486-2	99.50
85-87	300 (4.9l), ID#'s E5TE-AA	F-9A486-5	99.50
85-86	300 (4.9l), ID#'s E5TE-JA	F-9A486-4	99.50
87	300 (4.9l), ID#'s E5TE-JA, E7TE-JA	F-9A486-4	99.50
88-92	300 (4.9l)	F-9A486-4	99.50
74-84	302 (5.0l), w/port in end plate	F-9A486-2	99.50
74-84	302 (5.0l), w/port in housing	F-9A486-3	99.50
85-87	302 (5.0l), ID#'s E1TE-A1A, A2A	F-9A486-3	99.50
85	302 (5.0l), ID#'s E1TE-D1A, D2A, E5TE-G1A, G2A	F-9A486-2	99.50
86	302 (5.0l), ID#'s E1TE-D1A, D2A	F-9A486-2	99.50
86	302 (5.0l), ID#'s E6TE-AA	F-9A486-7	99.50
87	302 (5.0l), ID#'s E5TE-DB	F-9A486-8	99.50
88-95	302 (5.0l)	F-9A486-8	99.50
96	302 (5.0l)	F-9A486-9	113.95
78-79	351M (5.8l), w/port in end plate	F-9A486-2	99.50
78-79	351M (5.8l), w/port in housing	F-9A486-3	99.50
85-87	351W (5.8l), ID#'s E1TE-A1A, A2A, A3A	F-9A486-3	99.50
85-86	351W (5.8l), ID#'s E5TE-FA	F-9A486-12	99.50
85-88	351W (5.8l), ID#'s E5TE-GA	F-9A486-11	99.50
85-87	351W (5.8l), ID#'s E5TE-KA	F-9A486-10	99.50
88-93	351W (5.8l), ID#'s E8TE-BA, BB, core chrg $120	F-9A486-15	99.50
88-95	351W (5.8l), ID#'s E8TE-CA	F-9A486-14	99.50
88-95	351W (5.8l), ID#'s E8UE-BA	F-9A486-13	99.50
94-95	351W (5.8l), ID#'s F4TE-BA	F-9A486-16	107.95
96	351W (5.8l)	F-9A486-17	113.95

9B289 DIVERTER VALVE, Replacement

NEW!

Replacements fit only those parts with the listed ID numbers.

83	4.9l, ID# E1TE-9F491-AB	F-9B289-2A	156.95
84-85	4.9l, ID# E3EE-9F491-C3A	F-9B289-7A	179.95
86-92	4.9l, ID# E3EE-9F491-C3A	F-9B289-7A	179.95
82	5.0l, Calif., ID# E1TE-9F491-AA	F-9B289-2A	156.95
85	5.0l, ID# E47E-9F491-BA	F-9B289-2A	156.95
86-90	5.0l, ID# E47E-9F491-BA	F-9B289-2A	156.95
91-92	5.0l, ID# E47E-9F491-BA	F-9B289-2A	156.95
84-85	5.8l, ID# E1TE-9F491-AB, E47E-9F491-BA, E4SE-9F491-BA	F-9B289-2A	156.95
88-92	5.8l, ID# E47E-9F491-BA	F-9B289-2A	156.95
88-91	5.8l, ID# E7TE-9F491-BA	F-9B289-14A	115.95

9D447/9B449 PIPE, Thermactor Air

NEW!

Replacements fit only those parts with the listed ID numbers.

EGR

85-94	5.0l, replacement	F-9D447-1A	90.75
88-94	351W (5.8l) , replacement	F-9D447-2A	63.50

Crossover

85-93	5.0l, ID# E7TZ-9B449-A	F-9B449-3A	62.50
96	5.0l, ID# E7TZ-9B449-A	F-9B449-3A	62.50

Head Feed

80-85	300 (4.9l)	F-9B445-3A	99.75
87-92	300 (4.9l)	F-9B445-5A	116.95
95-96	351W (5.8l), VIN code H, RH	F-9B445-4A	101.95
95-96	351W (5.8l), VIN code H, LH	F-9B446-4A	103.95

5F235 PIPE, Thermactor Air, Convertor

NEW!

Replacements fit only those parts with the listed ID numbers.

84-86	4.9l, replacement	F-5F235-1A	105.95
90-92	4.9l, replacement	F-5F235-2A	68.25
85	5.0l, replacement	F-5F235-2A	68.25
90-93	5.0l, 5.8l, replacement	F-5F235-2A	68.25

ENGINE GASKETS



We proudly feature quality gaskets from FEL-PRO

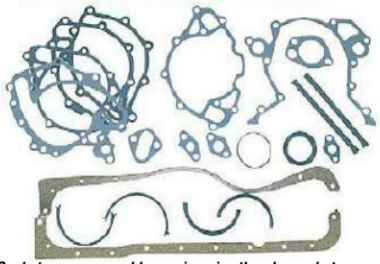

Gaskets are grouped by engine size then by gasket use or location.

Valve grind sets contain gaskets normally used when the heads are removed. Usually from the head gasket on up. Lower end sets include block gaskets, and front cover gaskets on forward. There is no overlap between the two sets. Overhaul sets combine the valve grind and lower end sets to do a complete engine. In many instances no overhaul set is listed. To do a complete engine order the proper valve grind and lower end sets together. Emissions gaskets are not included in any of the above sets.

170, 200 cid, I-6 cyl., 1966-74

	Head gasket	6051-1	42.75
	Valve grind set	6079-1	92.25
	Overhaul set	6008-1	142.95
	Oil pan	6781-1	21.65
66-73	Rear main seal set, rope	6701-1	7.35
	Rear main seal, rubber	6701-2	32.75
	Timing cover and front seal	6020-1	26.25
	Intake/exhaust manifold	9433-1	12.80
	Valve cover	6584-2	14.90
	Water outlet	8255-1	1.55
	Air cleaner mounting, 2 5/8" I.D. x 3 1/8" O.D.	9654-1	1.55
	Fuel pump mounting	9417-1	1.20
	Water pump mounting	8507-1	2.55

289 cid, V-8, 1966-68

	Head Gasket, each	6051-2	23.40
	Oil pump pickup to pump	6626-1	1.70
	Valve Grind Set	6079-3	137.95
	Lower End Set	6E078-3	51.75
	Oil Pan	6781-2	19.25
	Rear Main Seal, rubber	6701-3	23.75
	Timing Cover and Front Seal	6020-2	23.45
	Intake Manifold set	9433-2	19.95
	Exhaust Manifold, pair	9431-1	18.20
	Valve Cover set	6584-1	15.10
	Water Outlet	8255-1	1.55
	Air Cleaner Mounting	9654-2	3.65
	Carb Mount	9447-7	2.05
	Fuel Pump Mounting	9417-1	1.20
	Water Pump Mounting, to block	8507-4	2.15

300 cid (4.9l), I-6, 1980-92

80-92	Head Gasket	F-6051-9	35.50
80-86	Valve Grind Set	F-6079-9	89.50
87-92	Valve Grind Set, w/EFI	F-6079-14	89.50
80-85	Lower End Set, (b4 5/15/85)	F-6078-9	27.25
85-86	Lower End Set, (from 5/15/85)	F-6078-14	45.95
87-92	Lower End Set	F-6078-14A	115.50
80-86	Oil Pan, (b4 5/15/85)	F-6710-9	20.95
85-92	Oil Pan, (from 5/15/85)	F-6710-14	42.95
80-86	Rear Main Seal, rubber	F-6701-9	24.75
80-85	Timing Cover/Front Seal, (b4 5/15/85)	F-6020-9	18.70
85-92	Timing Cover/Front Seal, (from 5/15/85)	F-6020-14A	16.20
80-86	Intake/Exhaust Manifold	F-9433-9	19.75
87-92	Intake/Exhaust Manifold	F-9433-14	27.50
87-92	Intake set, EFI, upper to plenum	F-9H486-14	6.95
80-92	Valve Cover	F-6584-9A	14.35
80-92	Push Rod Cover	F-6521-9	19.25
80-85	Water Outlet, (b4 5/15/85)	8255-1	1.55
85-92	Water Outlet, (from 5/15/85)	F-8255-14	1.55
80-86	Air Cleaner Mounting, 2 5/8" I.D. x 3 1/8" O.D.	9654-1	1.55
80-86	EGR Valve Adapter	F-9E464-10	2.75
87-92	EGR Valve adapter	F-9E464-18	2.90
87-92	Fuel Inj. Mounting, throttle body to plenum	F-9E936-14	1.70
80-87	Fuel Pump Mounting, w/o EFI	9417-1	1.20
80-92	Push rod cover grommet, 2 reqd	T-6570-1	2.65
80-92	Water Pump, to block	F-8507-9	2.10

302 cid (5.0l), V-8, 1969-1996

69-96	Head Gasket, each	6051-2	23.40
69-76	Valve Grind Set	6079-3	137.95
77-84	Valve Grind Set	6079-6	115.50
85-88	Valve Grind Set	6079-3	137.95
89-96	Valve Grind Set	F-6079-15B	149.95
69-83	Lower End Set, (b4 12/1/82)	6E078-3	51.75
83-96	Lower End Set, (from 12/1/82)	F-6078-15A	36.75
69-94	Oil Pan, multi piece	6781-2	19.25
88-96	Oil Pan, one pc rubber	F-6710-15A	40.25
69-83	Rear Main Seal, 2 pc rubber, (b4 12/1/82)	6701-3	23.75
83-96	Rear Main Seal, 1 pc rubber, (from 12/1/82)	F-6701-8A	19.90
69-78	Timing Cover and Front Seal	6020-2	23.45
73-96	Timing Cover and Front Seal, 88-96 reqs 1 pc rubber oil pan gasket	F-6020-10	17.95
69-76	Intake Manifold set	9433-2	19.95
77-84	Intake Manifold set	F-9433-15	17.95
85-96	Intake Manifold set, lower only	F-9433-15A	21.70
85-96	Intake set, EFI, upper to plenum	F-9H486-15	10.60
69-96	Exhaust Manifold, pair	9431-1	18.20
69-88	Valve Cover set, standard cork	6584-1	15.10
89-96	Valve Cover set, Hi-temp w/compression stops	F-6584-15	17.20
69-84	Air Cleaner Mounting, 5" I.D. x 5 1/2" O.D.	9654-2	3.65
82-84	Air Cleaner Mounting, 5 5/16" I.D. x 5 11/16" O.D.	9654-2	3.65
69-96	Water Outlet	8255-1	1.55
69-72	Carb Mounting, 2v carb	9447-7	2.05
73-84	Carb Mounting, to spacer	9447-12	9.85
73-74	Spacer Mounting, to manifold	F-9447-15B	6.40
75-82	Spacer Mounting, to manifold	F-9447-10A	3.85
83-84	Spacer Mounting, to manifold	F-9447-15D	4.65
73-76	EGR Valve	F-9D476-15	2.75

78-84	EGR Valve Adapter	F-9E464-10	2.75
85-96	EGR Valve Adapter	F-9E464-18	2.90
85-96	Fuel Inj. Mounting, throttle body to plenum	F-9E936-15	3.05
69-84	Fuel Pump Mounting	9417-1	1.20
69-86	Water Pump Mounting, to block	8507-4	2.15
87-96	Water Pump Mounting, to block	F-8507-15	3.40

351M cid (5.8l), 400 cid (6.6l), V-8, 1978-79

351M can be discerned from a 351W by its fuel pump bolt holes located vertically.

	Head Gasket, 2 reqd	6051-4	32.50
	Valve Grind Set	6079-7	107.50
	Overhaul Set	F-6008-16	124.95
	Oil Pan	6781-5	20.95
	Rear Main Seal, rubber	6701-4	19.95
	Timing Cover and Front Seal	6020-5	24.75
	Intake Manifold set	F-9433-16	57.50
	Exhaust Manifold, pair	9431-3	18.95
	Valve Cover set	6584-4	22.60
	Water Outlet	8255-2	1.65
	Air Cleaner Mounting, 5" I.D. x 5 1/2" O.D.	9654-2	3.65
	Carb Mounting, to spacer	9447-12	9.85
	Spacer Mounting, to intake	F-9447-16	3.65
	EGR Valve Adapter	F-9E464-10	2.75
	Fuel Pump Mounting	9417-3	1.90
	Water Pump Mounting	F-8507-16	2.75

351W cid, (5.8l), V-8, 1980-96

351W can be discerned from a 351M by its fuel pump bolt holes located horizontally

80-96	Head Gasket, each	6051-2	23.40
80-86	Valve Grind Set	6079-6	115.50
88-96	Valve Grind Set	F-6079-17B	117.25
80-83	Lower End Set, (b4 7/11/83)	6E078-6	44.75
83-88	Lower End Set, (from 7/11/83 to b4 07/87)	F-6078-17B	55.75
88-96	Lower End Set, (from 07/87)	F-6078-17C	59.25
80-93	Oil Pan, multi piece	6781-4	21.70
87-93	Oil Pan,1 pc rubber	F-6710-20	48.25
94-96	Oil Pan,1 pc rubber	F-6710-21	50.95
80-83	Rear Main Seal, rubber, (b4 7/11/83)	6701-4	19.95
83-87	Rear Main Seal, rubber, (from 7/11/83 to b4 07/87)	F-6701-9	24.75
87-96	Rear Main Seal, rubber, one piece, (from 07/87)	F-6701-9A	21.20
80-96	Timing Cover and Front Seal, 87-96 reqs 1 pc oil pan gaskets	F-6020-10	17.95
80-87	Intake Manifold set	F-9433-15	17.95
88-98	Intake Manifold set, EFI, lower set only	F-9433-15	17.95
87-96	Intake set, EFI, upper to plenum	F-9H486-17	8.60
80-96	Exhaust Manifold, pair	9431-1	18.20
80-88	Valve Cover set	6584-1	15.10
80-91	Valve Cover set, premium hi-temp w/compression stops	F-6584-15	17.20
80-98	Water Outlet	8255-1	1.55
80-87	Air Cleaner Mounting, 5" I.D. x 5 1/2" O.D.	9654-2	3.65
82-87	Air Cleaner Mounting, 5 5/16" I.D. x 5 11/16" O.D.	F-9654-15	2.50
80-87	Carb Mounting, 2v carb to spacer	9447-12	9.85
80-83	Spacer Mounting, 2v carb to intake	F-9447-10A	3.85
84-87	Spacer Mounting, 2v carb to intake	F-9447-15D	4.65
84-87	Carb Mounting, 4v carb to manifold	F-9447-17	10.20
84-87	Carb Mounting, 4v carb to spacer	F-9447-17A	21.35
84-87	Spacer Mounting, 4v spacer to intake	F-9447-17B	4.60
88-91	Fuel Inj. Mounting, throttle body to plenum	F-9E936-17	1.65
80-96	Fuel Pump Mounting	9417-1	1.20
80-86	Water Pump Mounting, to block	8507-4	2.15
87-96	Water Pump Mounting, to block	F-8507-15	3.40

ENGINE REBUILD PARTS

We proudly feature quality engine parts from

FEDERAL MOGUL

SEALED POWER

170 cid, I-6, 1966-72

	Pistons, cast alum., .030" oversize, each	F-6108-12C	46.45
	Ring set, standard iron, .030" oversize	F-6148-12C	68.50
	Rod bearings, .010" oversize, per rod	F-6211-12A	10.45
	Rod bearings, .020" oversize, per rod	F-6211-12B	10.45
	Cam bearing set	F-6A251-12	32.15
	Main bearing set, .010" oversize	F-6333-12A	118.95
	Main bearing set, .020" oversize	F-6333-12B	118.95
	Timing chain	6268-2	13.80
	Timing chain set, incl chain & sprockets	F-6268-12	29.50
	Crankshaft sprocket	6306-2	5.30
	Lifters, each	F-6500-4A	6.65
	Rocker arms, each	F-6564-12	34.95
	Push rods, each	F-6565-12	3.78
	Oil pump	6600-4	64.60
	Oil pump driveshaft	6A618-1	9.50

200 cid, I-6, 1972-74

	Ring set, standard iron, .030" oversize	F-6148-20C	68.95
	Rod bearings, .010" oversize, per rod	F-6211-12A	10.45
	Rod bearings, .020" oversize, per rod	F-6211-12B	10.45
	Cam bearing set	F-6A251-12	32.15
	Main bearing set, .010" oversize	F-6333-20A	135.50
	Main bearing set, .020" oversize	F-6333-20B	135.50
	Timing chain	6268-2	13.80
	Timing chain set, incl chain & sprockets	F-6268-12	29.50
	Crankshaft sprocket	6306-2	5.30
	Lifters, each	F-6500-20	5.95
	Valve springs, each	F-6513-20	2.42
	Push rods, each	F-6565-20	2.78
	Oil pump	6600-4	64.60
	Oil pump driveshaft	6A618-1	9.50

289 cid, V-8, 1966-68

	Pistons, cast alum., .030" oversize, dished head, 9.3 to 1 comp. ratio each	6108-1A	18.50
	Pistons, forged alum., .030" oversize, flat top, 10.1 to 1 comp. ratio, each	6108-3A	76.75
	Ring set, standard iron, .030" oversize	6148-1A	52.45
	Ring set, special moly, .030" oversize	6148-1B	70.75
	Rod bearings, .010" oversize, per rod	6211-1A	51.35
	Rod bearings, .020" oversize, per rod	6211-1B	51.35
	Rod bearing set, standard rod journals	6211-1	51.35
	Rod bearing set, .010" oversize	6211-1A	51.35
	Rod bearing set, .030" oversize	6211-1C	51.35
	Cam bearing set	6A251-1	36.10
	Main bearing set, .010" oversize	6333-1A	50.80
	Main bearing set, .020" oversize	6333-1B	50.80
	Camshaft, standard	6250-1	116.95
	Lifters, each	6500-1	3.75
	Timing chain set, all steel, 3 pc set	F-6268-13	26.95
	Valve springs, each	6513-4	2.42
	Rocker arms, each	F-6564-13	7.25
	Push rods, standard, 6.801" length, each	6565-1	2.84
	Push rods, chrome moly, 6.77" length, each	6565-1A	11.65
	Oil pump, standard	6600-2	43.60
	Oil pump, high volume	6600-2A	71.50
	Oil pump driveshaft, standard	6A618-2	8.35
	Oil pump driveshaft, HD, chrome moly	6A618-2A	CALL
	Oil pump pickup to pump	6626-1	1.70

300 cid (4.9l), I-6, 1980-92

Due to the many variations of this engine please call or write with your needs.

302 cid (5.0l), V-8, 1969-96

	Pistons- Please call or write with your needs		
69-86	Ring set, standard iron, .030" oversize	6148-1A	52.45
69-86	Ring set, special moly, .030" oversize	6148-1B	70.75
87-96	Ring set, standard iron, .030" oversize	F-6148-10C	133.75
69-96	Rod bearings, .010" oversize, per rod	6211-1A	51.35
69-96	Rod bearings, .010" oversize, per rod	6211-1B	51.35
	Rod bearing set, standard rod journals	6211-1	51.35
	Rod bearing set, .010" oversize	6211-1A	51.35
	Rod bearing set, .030" oversize	6211-1C	51.35
69-96	Main bearing set, .010" oversize	6333-1A	50.80
69-96	Main bearing set, .020" oversize	6333-1B	50.80
69-96	Cam bearing set	6A251-1	36.10
69-91	Lifters, each, excl roller cam	6500-1	3.75
92-96	Lifters, each, w/roller cam	F-6500-10	16.20
69-72	Timing chain set, w/ one pc fuel pump eccentric	F-6268-10	24.20
72-87	Timing chain set, (b4 9/1/87), w/ two pc fuel pump eccentric	F-6268-10	24.20
87-96	Timing chain set, (from 9/1/87)	F-6268-10A	33.35
80-96	Valve springs, Intake, each	F-6513-10A	2.41
80-96	Valve springs, Exhaust, each	6513-6	2.41
80-96	Rocker arms, incl pivot, each.	F-6564-10	16.70
80-91	Push rod, 6.875 OAL, excl roller, each	6565-2	2.41
80-91	Push rod, chrome moly option to above push rod, each	6565-2A	11.65
92-96	Push rod, 6.250 OAL, w/roller, each	F-6565-10B	2.53
69-96	Oil pump, standard	6600-2	43.60
69-96	Oil pump, high volume, incl std shaft	6600-2A	71.50
69-96	Oil pump driveshaft, standard	6A618-2	4.95
69-86	Oil pump driveshaft, HD, w/o EEC-IV, chrome moly	6A618-2A	CALL
87-96	Oil pump driveshaft, HD, w/EEC-IV, chrome moly	F-6605-10A	20.25

351M cid (5.8l), V–8, 1978–79

Pistons, cast alum., .030" oversize, each F-6108-16C 22.90
Ring set, standard iron, .030" oversize 6148-1A 52.45
Ring set, special moly, .030" oversize 6148-1B 70.75
Rod bearings, .010" oversize, per rod F-6211-16A 8.15
Rod bearings, .020" oversize, per rod F-6211-16B 8.15
Main bearing set, .010" oversize F-6333-16A 65.20
Main bearing set, .020" oversize F-6333-16B 65.20
Cam bearing set F-6A251-16 40.25
Camshaft, excl 79 F350 ..... F-6250-16 152.75
Lifters, each 6500-1 3.75
Timing chain set, inc. chain & sprockets F-6268-16 26.90
Valve springs, intake, each F-6513-16 2.41
Valve springs, exhaust, each .. 6513-5 2.41
Rocker arms, each F-6564-16 8.30
Push rods, each F-6565-16 2.41
Oil pump, standard 6600-8 61.75
Oil pump, high volume F-6600-16A 80.50
Oil pump driveshaft, standard F-6A618-16 8.55
Oil pump driveshaft, HD, chrome moly ..... 6A618-4A CALL
Oil pump pickup to pump 6626-1 1.70

351W cid (5.8l), V–8, 1980–1996

80-96 Pistons, cast alum., .030" oversize, each F-6108-17AC 22.95
80-94 Ring set, standard iron, .030" oversize, exc. Lightning 6148-1A 52.45
80-94 Ring set, special moly, .030" oversize 6148-1B 70.75
93-96 Ring set, standard iron, .030" oversize F-6148-10C 133.75
93-96 Ring set, special moly, .030" oversize F-6148-10CF 134.75
80-96 Rod bearings, .010" oversize, per rod F-6211-17A 7.45
80-96 Rod bearings, .020" oversize, per rod F-6211-17B 7.45
80-96 Cam bearing set 6A251-1 36.10
80-96 Main bearing set, .010" oversize F-6333-16A 65.20
80-96 Main bearing set, .020" oversize F-6333-16B 65.20
80-85 Camshaft, w/2v carb F-6250-17 119.95
84-89 Camshaft, excl 2v carb F-6250-17A 137.75
90-93 Camshaft, ... F-6250-17A 137.75
94-96 Camshaft, VIN code H F-6250-17B 351.75
80-96 Lifters, each, non-roller 6500-1 3.75
94-96 Lifters, each, roller F-6500-10 16.20
80-85 Timing chain set, 3pc set, w/2v carb F-6268-10 24.20
84-85 Timing chain set, 3pc set, w/4v carb, (b4 12/09/84) F-6268-10B 60.10
85-96 Timing chain set, 3pc set, w/4v or EFI, (from 12/09/84) F-6268-10A 33.35
80-83 Valve springs, intake, each F-6513-10A 2.41
84-85 Valve springs, intake, 2v, each F-6513-10A 2.41
80-83 Valve springs, exhaust, each .. 6513-6 2.41
84-85 Valve springs, exhaust, 2v, each 6513-6 2.41
84-85 Valve springs, intake, 4v, each F-6513-10C 5.35
84-85 Valve springs, exhaust, 4v, each F-6513-10D 5.85
86-96 Valve springs, intake, each F-6513-10C 5.35
86-96 Valve springs, exhaust, each F-6513-10D 5.85
80-96 Rocker arms, stamped, each .. F-6564-10 16.70
80-93 Push rods, w/stamped rocker arm, each F-6565-17A 2.53
80-96 Push rods, chrome moly option to 17A above, each F-6565-17B 11.55
94-96 Push rods, w/roller cam, 7.54" F-6565-17C 2.53
75-96 Oil pump, standard 6600-7 52.95
75-96 Oil pump, high volume, check pan for clearance F-6600-17A 103.50
75-96 Oil pump driveshaft, standard 6A618-3 8.55
75-86 Oil pump driveshaft, HD, w/o EEC-IV, chrome moly 6A618-3A 20.25
Oil pump pickup to pump 6626-1 1.70

400 cid (6.6l), V–8, 1978–79

Pistons, cast alum., .030" oversize, each F-6108-24C 23.90
Ring set, standard iron, .030" oversize 6148-1A 52.45
Rod bearings, .010" oversize, per rod F-6211-16A 8.15
Rod bearings, .020" oversize, per rod F-6211-16B 8.15
Cam bearing set F-6A251-16 40.25
Main bearing set, .010" oversize F-6333-16A 65.20
Camshaft F-6250-16 152.75
Lifters, each 6500-1 3.75
Timing chain set, incl chain & sprockets F-6268-16 26.90
Valve springs, intake, each F-6513-16 2.41
Valve springs, exhaust, each .. 6513-5 2.41
Rocker arms, each F-6564-16 8.30
Push rods, each F-6565-16 2.41
Oil pump, standard 6600-8 61.75
Oil pump, high volume F-6600-16A 80.50
Oil pump driveshaft, standard F-6A618-16 8.55
Oil pump driveshaft, HD, chrome moly ..... 6A618-4A CALL

FUEL SECTION INFORMATION

Fuel tank .....pg 62
Fuel filler.....pg 64
Fuel line from tank ...pg 64
Fuel line to carb.....pg 65
Carburetor.....pg 66
Choke .....pg 67
Engine management .pg 68
Fuel level ..... pg 63
Fuel tank selector ..... pg 64
Fuel pump ..... pg 65
Fuel filter ..... pg 65
Air cleaner..... pg 66
Accelerator linkage ... pg 67

Some abbreviations found in this section (alphabetical-read across):

chrg .. charge (core charge)
ev/em evaporative emissions
FA ..... Front axle
HD..... Heavy duty
l.. litre (metric engine size)
mm.....millimeter
OE Original equipment style
RA.....Rear axle
reqd ..... Required
RH.....passenger side
w/..... Used with
WB ..... Wheel base
dia. .....diameter
excl ..... excludes
GVW .. Gross vehicle weight
incl..... includes
LH..... drivers side
MT .... Manual transmission
pc (s) ..... Piece (s)
Repl'mt .....Replacement
reqs.....Requires
ser#.....serial number
W/o ..... Used without

 # pounds-when used following a number (8500#= 8500 pounds)

A complete listing of abbreviations may be found at the rear of this catalog.

FUEL TANK

9002 FUEL TANK, Original Style

Super tough polyethylene reproduction gas tanks are nearly 1/4" thick and will withstand cracking down to -130 degrees! Won't rust or corrode. No welded seams to split either. 5 year limited manufacturer warranty. Uses factory mountings:



66-70 Rear main 13 gal tank, w/o ev/em, repro F-9002-37C 198.95



66-70 Front aux. 11 gal tank, w/o ev/em, repro F-9002-35C 198.95



70-76 Rear main 13 gal tank, w/ev/em, may fit some 77's, repro F-9002-18C 198.95



70-76 Front aux. 11 gal tank, w/ev/em, repro F-9002-36C 198.95





Original style ni-terne steel:

78	25.5 gal., vent pipe is towards front, w/emiss. hole, Calif. only, repro	F-9002-22	158.95
78	33 gal., vent pipe is towards front, w/emiss. hole, Calif. only, repro	F-9002-23	140.95
78	33 gal., vent pipe is towards front, w/emiss. hole, Calif. only, original, limited NOS stock availability	F-9002-23A	199.95
78	25.5 gal., vent pipe is towards rear, w/o emiss. hole, excl Calif., repro	F-9002-20	151.95
78	33 gal., vent pipe is towards rear, w/o emiss. hole, exc. Calif, repro	F-9002-21	135.95
79	25.5 gal., vent pipe is towards front, w/emiss. hole, repro	F-9002-22	158.95
79	33 gal., vent pipe is towards front, w/emiss. hole, repro	F-9002-23	140.95
79	33 gal., vent pipe is towards front, w/emiss. hole, original, limited NOS stock availability	F-9002-23A	199.95
80-83	25.5 gal., w/emiss. hole, no external vent hole, repro	F-9002-25	157.95
80-86	33 gal., w/emiss. hole, no external vent pipe, small 2" gauge hole, repro	F-9002-24	129.95
85-86	33 gal., w/emission hole, 3 5/8" gauge hole, repro	F-9002-26	129.95
87-89	32 gal., 2" gauge hole, repro	F-9002-24A	129.95

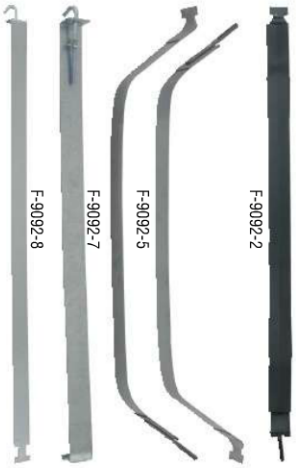

9092 STRAP, Fuel Tank Retaining

Unless noted otherwise 2 straps are required.

66-76	Rear main tank, 1 reqd	F-9092-7	16.95
66-76	Front aux. tank, 2 reqd	F-9092-8	34.95
78-96	25.5 & 33 gal. tank, original	F-9092-2	125.00
78-96	25.5 & 33 gal. tank, repro, pr.	F-9092-5	34.95

FUEL LEVEL



9202 FLOAT, Fuel Sending Unit

66-86	Brass, original style	9202-1	7.41



9275 SENDING UNIT, Fuel Tank

See also 9H307 Fuel pumps.

Always replace the fuel filter when changing sending units.

66-69	Repro, replacement	F-9275-8A	58.25
70	W/o ev/em, repro	F-9275-8A	58.25
70-72	W/ ev/em, repro	F-9275-9A	58.25
73-76	Std tank, 73 w/o fuel vapor return, repro	F-9275-8A	58.25
73-77	Aux. tank, 73 w/o fuel cap or return, repro	F-9275-9A	58.25
78-79	351M, 400, 33 gal., repro	F-9275-11A	74.95
90-96		F-9A299-5	70.95

9276 GASKET, Fuel Tank to Sending Unit

66-80		9276-1	0.99
NEW! 66-85	Most tanks w/ small neck including 66-77 plastic tanks, flat rubber	F-9276-5	2.50



9A307 LOCKING RING, Fuel Sending Unit

66-86	Use w/all steel tanks	9A307-1	5.95
77	Aux. tank, plastic	F-9A307-2	15.95



9280 GAUGE ASSY, Fuel Level/Oil Pres.

90	(b4 4/90), w/tach	F-9280-10	213.10
90-91	(from 4/90), w/o tach	F-9280-9	214.45

A	9155	Filter, fuel	L	9034	Pipe, fuel filler
B	9324	Hose, fuel line	M	9030	Fuel cap
C	9369B	Line, pump to carb	N	9369A	Line, tank to pump
D	9417	Gasket, fuel pump	O	9A010	bolt, fuel retaining strap
E	9350	Fuel pump	P	9092	Strap, fuel tank
F	9A307	Ring, fuel sender locking	Q	9D653	Canister, evaporative fuel
G	9275	Fuel sending unit	R	8287	Clamp, hose
H	9276	Seal, sending unit	S	9282	Line, fuel vapor return
J	9002	Fuel tank	Items in blue- check lisings for applications		
K	9047	Hose, fuel filler			

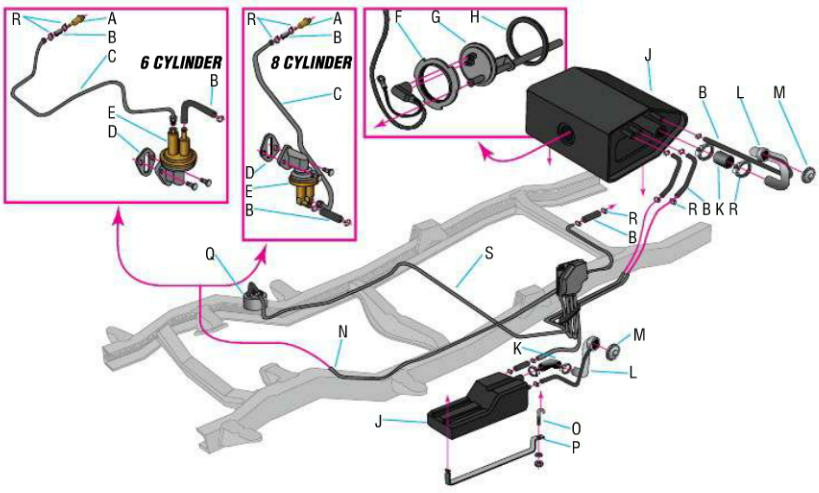

FUEL FILLER



9030 CAP, Fuel Filler

66-70	Locking	F-9030-3	11.75
66-70	W/o ev/em	F-9030-4	9.50
66-70	Vented, chrome	F-9030-2A	8.25
66-70	Vented, stainless steel	F-9030-2B	6.95
71-76	W/o ev/em	F-9030-18	7.95
73-75	(b4 75 ser#W80,001), w/ ev/em, locking	F-9030-5	34.95
77	W/ ev/em, 2 5/8" O.D., handle on cap, zinc	F-9030-11	20.95
77	W/ ev/em, chrome, non-vented, 2 5/8" O.D., locking	F-9030-15	44.95
77	Chrome locking	F-9030-15	44.95
77-88	Locking	F-9030-15A	18.50
78	W/o ev/em, handle on cap, zinc, excl Calif.	F-9030-13	6.95
78	Calif. emissions, chrome locking	F-9030-15	44.95
78	W/ ev/em, handle on cap, Calif. only, zinc	F-9030-11	20.95
78	W/ ev/em, handle on cap, Calif. only, chrome, non-vented, 2 5/8" O.D., locking	F-9030-15	44.95
79-82	Chrome locking	F-9030-15	44.95
79-82	W/ ev/em, 2 5/8" O.D., handle on cap, zinc	F-9030-11	20.95
79-82	W/ ev/em, chrome, non-vented, 2 5/8" O.D., locking	F-9030-15	44.95
83-86	Handle on top, zinc	F-9030-16	8.95
83-89	Excl 5.8l, chrome, non-vented, 2 5/8" O.D., locking	F-9030-15	44.95
87-96	Plastic, threaded w/tether, 3 1/2" O.D.	F-9030-17	12.95
90	Black plastic, 2 tang twist type	F-9030-19	14.95

9030 GASKET, Gas Cap

NEW!

77	W/ ev/em, 2 5/8" O.D., handle on cap, zinc	9030-1K	0.95
78	W/ ev/em, handle on cap, Calif. only	9030-1K	0.95
79-82	W/ ev/em, 2 5/8" O.D., handle on cap, zinc	9030-1K	0.95

FREE UPS SHIPPING on orders over $300



9047 HOSE, Fuel Filler Pipe to Tank

66-76	Excl aux. nylon tank	F-9047-9	11.95
NEW! 66-76	Aux nylon tank	F-9047-11	33.50
NEW! 77	Aux nylon tank	F-9047-12	66.75
80-92		F-9047-10	43.98

8287 HOSE CLAMP, Fuel Hose

66-90	2 reqd	F-8287-2	1.50

9080 GROMMET, Fuel Tank Filler Neck

78-79		F-9080-9	14.95

FUEL TANK SELECTOR



9A050 SWITCH ASSY, Fuel Tank Selector

66-77	W/aux nylon tank	F-9A050-3	24.95

9A389 BEZEL, Fuel Selector Switch

68-77	W/aux. fuel tank	F-9A389-1	7.50

10852 BEZEL, Auxiliary Fuel Switch

68-77	W/aux. fuel tank	F-10852-13A	14.95

FUEL VAPOR RETURN

9B076 GROMMET, Gas Tank Vent

NEW!

87-96		F-9B076-1	6.20



9D653 CANISTER ASSY, Fuel Vapor Storage

NEW!

80-85	(before 8/85), 4.9l, single fuel tank, excl Calif., 2 large ports	F-9D653-1	136.82
85-89	(from 8/85), 4.9l, single fuel tank, excl Calif., 2 large ports	F-9D653-1	136.82
90-96	4.9l, single fuel tank, excl Calif., 2 large ports	F-9D653-1	136.82
80-89	5.0l, Calif., primary, 2 large ports	F-9D653-2	81.25
80-89	5.0l, Calif., primary, replacement	F-9D653-2A	94.95
80-89	5.0l, dual fuel tanks, excl Calif., 2 large ports	F-9D653-2	81.25
80-89	5.0l, dual fuel tanks, excl Calif., replacement	F-9D653-2A	94.95
82-89	5.0l, high altitude, 2 large ports	F-9D653-2	81.25
82-89	5.0l, high altitude, replacement	F-9D653-2A	94.95
80-85	(before 8/85), 5.0l, single fuel tank, excl Calif., 2 large ports	F-9D653-1	136.82
85-89	(from 8/85), 5.0l, single fuel tank, excl Calif., 2 large ports	F-9D653-1	136.82
90-96	5.0l, original, 2 large ports, 2 small ports	F-9D653-3	133.31
90-96	5.0l, replacement, 2 large ports, 2 small ports	F-9D653-3A	87.25
90-96	5.0l, 2 large ports	F-9D653-2	81.25
90-96	5.0l, replacement	F-9D653-2A	94.95
90-96	5.0l, single fuel tank, excl Calif., 2 large ports	F-9D653-1	136.82
80-89	5.8l, Calif., primary, 2 large ports	F-9D653-2	81.25
80-89	5.8l, Calif., primary, replacement	F-9D653-2A	94.95
80-89	5.8l, dual fuel tanks, excl Calif., 2 large ports	F-9D653-2	81.25
80-89	5.8l, dual fuel tanks, excl Calif., replacement	F-9D653-2A	94.95
82-89	5.8l, high altitude, 2 large ports	F-9D653-2	81.25
82-89	5.8l, high altitude, replacement	F-9D653-2A	94.95
80-85	(before 8/85), 5.8l, single fuel tank, excl Calif., 2 large ports	F-9D653-1	136.82
85-89	(from 8/85), 5.8l, single fuel tank, excl Calif., 2 large ports	F-9D653-1	136.82
90-96	5.8l, original, 2 large ports, 2 small ports	F-9D653-3	133.31
90-96	5.8l, replacement, 2 large ports, 2 small ports	F-9D653-3A	87.25

9282 VENT LINE, Fuel Tank Vapor

Prebent lines in carbon or stainless steel.

73-75	Carbon, 2 pc	F-9282-63	44.95
	Stainless	F-9282-63S	69.95
77	Vapor only, carbon, 2 pc	F-9282-64	64.95
	Stainless	F-9282-64S	98.95

FUEL LINE-TANK TO PUMP

9369A FUEL LINE, Tank To Pump

Pre-bent lines of carbon or stainless steel. Duplicated against original lines using CNC computer bender for accuracy and consistency. Manufactured to exceed all DOT, SAE, and ISO specifications. Stainless tubes are 304 seamless nonmagnetic stainless steel. All tubes are pressure tested to 6000 psi burst.

77	Dual tanks, carbon, 3 pc	F-9369A-64	64.95
	Stainless	F-9369A-64S	98.95
78-79	Carbon, 3 pc	F-9369A-67	64.95
	Stainless	F-9369A-67S	98.95


Visit us ONLINE at:
www.nationalpartsdepot.com
-or-
www.npdlink.com

FUEL PUMP



9350 FUEL PUMP ASSY, New Replacement

For non-fuel injected applications. FI see 9C407 and 9H307 headings. Engine mounted.

6 cylinder

NEW!	66-69	(before 12/1/68), 170, vacuum wipers, dual action	F-9350-29	91.95
	66-74	170, 200, w/electric wipers	F-9350-9	37.95

8 cylinder

NEW!	66-68	289, w/ integral filter, bolt together body, integral filter, incl gasket	9350-2B	48.50
	80-84	300 (4.9l)	F-9350-13	31.75
	85	300 (4.9l), (b4 12/84)	F-9350-13	31.75
	85-86	300 (4.9l), (from 12/84), excl Canada	F-9350-13	31.75
NEW!	69	(before 12/1/68), 302, bolt together body, integral filter, incl gasket	9350-2B	48.50
	69-74	(from 12/1/68), 302 (5.0l)	9350-6A	32.50
	75-79	302 (5.0l)	F-9350-35	29.75
	80-84	302 (5.0l)	F-9350-40	24.75
	85-87	302 (5.0l), w/carb	F-9350-40	24.75
	78-79	351M, 400	F-9350-38	33.25
NEW!	78-79	351M, 400, 25.5 gal. tank	F-9275-10A	58.95
	80-87	351W (5.8l)	F-9350-40	24.75
NEW!	85-86	EFI, 33 gal. tank	F-9275-15A	58.95
NEW!	85-86	33 gal. tank, excl EFI	F-9275-14A	58.95



9C407 FUEL PUMP, Electric, In-line

Replace in-line fuel filter when installing a new pump.

85-86	302 EFI, replacement design	F-9C407-1	158.95
87-89	All eng's, replacement design	F-9C407-1	158.95



9H307 FUEL PUMP, Electric, In-tank

Incl strainer, single pump reservoir style, replace in-line fuel filter also

87-89	300, 302, 351W	F-9H307-14	158.95
90-96	300, 302, 351W	F-9H307-1	209.50



9155 Filter, see listings in Fuel Filter section

9355 BOWL, Fuel Filter

66-69	(b4 12/1/68), w/fuel pump mounted filter, replacement, filter not included	9355-1	7.95

9C968 REGULATOR, Fuel Pressure

NEW!

Replacements fit only those parts with the listed ID numbers.

87-92	4.9l, ID# F1DE-AA	F-9C968-3A	100.95
85-86	5.0l, ID# E3EE-AA, AB, E5AE-AA, AB, E6EE-AA, E77E-AA, E7EE-AA, F4CE-AA	F-9C968-1A	30.30
87-88	5.0l, ID# E6AE-AA, AB, CA, DA, E7DE-BA	F-9C968-1A	30.30
88	5.0l, ID# E3EE-AA, AB, E5AE-AA, AB, E6EE-AA, E77E-AA, E7EE-AA	F-9C968-1A	30.30
92-93	5.0l, E6AE-AA, AB, CA, DA, E7DE-BA	F-9C968-1A	30.30
94	5.0l, ID# F4SE-AA	F-9C968-2A	67.95
94	5.0l, ID# F4TE-BA	F-9C968-2A	67.95
94-96	5.0l, ID# F4TE-BA	F-9C968-2A	67.95
88	5.8l, ID# E3EE-AA, AB, E5AE-AA, AB, E6EE-AA, E77E-AA, E7EE-AA	F-9C968-1A	30.30
88	5.8l, ID# E6AE-AA, AB, CA, DA, E7DE-BA	F-9C968-1A	30.30
89-93	5.8l, ID# E3EE-AA, AB, E5AE-AA, AB, E6EE-AA, E77E-AA, E7EE-AA	F-9C968-1A	30.30
92-93	5.8l, E6AE-AA, AB, CA, DA, E7DE-BA	F-9C968-1A	30.30
94-96	5.8l, ID# F4SE-AA	F-9C968-2A	67.95

FUEL LINE- PUMP TO CARB

9369B FUEL LINE, Pump to Carb

Pre-bent lines of carbon or stainless steel. Duplicated against original lines using CNC computer bender for accuracy and consistency. Manufactured to exceed all DOT, SAE, and ISO specifications. Lines and fittings are 45 degree standard automotive specs. Stainless tubes are made from 304 seamless nonmagnetic stainless steel. All tubes are pressure tested to 6000 psi burst.

66-67	6 cyl., carbon	F-9369B-61	19.95
	Stainless	F-9369B-61S	24.95
66-67	289-2v, carbon	F-9369B-62	19.95
	Stainless	F-9369B-62S	24.95
68	289-2v, carbon	F-9369B-63	19.95
	Stainless	F-9369B-63S	24.95
68-74	6 cyl., carbon	F-9369B-64	19.95
	Stainless	F-9369B-64S	24.95
69-77	302-2v, carbon	F-9369B-65	19.95
	Stainless	F-9369B-65S	24.95
78-79	351-2v, carbon	F-9369B-67	19.95
	Stainless	F-9369B-67S	24.95
78-79	351-4v, carbon	F-9369B-68	19.95
	Stainless	F-9369B-68S	24.95

9324 HOSE KIT, Rubber Fuel

Primarily used on fuel return lines. 2' hose and 4 clamps.

66-87	1/4" hose	F-9324-1	3.50
66-87	5/16" hose	F-9324-2	4.50
66-87	3/8" hose	F-9324-3	4.50

FUEL FILTER



9155/9365/9A335/9N184 FUEL FILTER

Original Motorcraft unless noted otherwise. Replace at least every 30,000 miles.

66-74	170, 200, on carb	9155-4	7.60
66-68	170, 200, 289, on pump	9155-2	6.35
67-68	289, on carb	9155-4	7.60
80	300 (4.9l) excl EFI, in-line	F-9155-5	7.35
81-84	300 (4.9l), in-line	F-9155-5	7.35
85	300 (4.9l), excl Calif.	F-9365-3	10.95
85	300 (4.9l), Calif.	F-9155-9	5.50
86-87	300 (4.9l)	F-9155-3	7.75
88-91	300 (4.9l) EFI	F-9155-7	17.60
92	300 (4.9l) EFI	F-9155-8	16.40
69	(b4 12/1/68), 302, on pump	9155-2	6.35
69-77	(from 12/1/68), 302 (5.0l), on carb	9155-4	7.60
78-84	302 (5.0l), excl EFI and Calif.	F-9155-3	7.75
78-85	302 (5.0l) Calif., excl EFI	F-9155-9	5.50
85	302 (5.0l) EFI	F-9155-3	7.75
86	302 (5.0l), element	F-9365-3	10.95
87-91	302 (5.0l) EFI	F-9155-7	17.60
92-96	302 (5.0l), gas, assy., EFI	F-9155-8	16.40
78	351M (5.8l)	F-9155-4	7.55
79	351M (5.8l), in-line	F-9155-5	7.35
80-85	351W (5.8l), excl Calif.	F-9155-3	7.75
80-85	351W (5.8l), Calif.	F-9155-9	5.50
86-87	351W (5.8l) EFI	F-9155-3	7.75
88-91	351 (5.8l) EFI	F-9155-7	17.60
92-96	351 (5.8l), gas, assy., EFI	F-9155-8	16.40
78	400 (6.6l)	F-9155-4	7.55
79	400 (6.6l), in-line	F-9155-5	7.35

See also Fuel line clips below---You'll need them!



Fuel line clips- required when changing fuel filter since they will most likely break when you try to remove them! Used mainly with EFI systems.

5/16" C-clip style, pair F-9155-17AK 3.95
3/8" C-clip style, each F-9155-17BK 3.10
1/4" Duck bill style, each..... F-9155-17CK 2.50
1/2" Duck bill style, each..... F-9155-17DK 2.75

CARBURETOR

9B550-1



9B550-2



9B550 DASHPOT, Auto Trans Carb Anti-Stall

66-69 6 cyl., Ford 1v carb 9B550-1 13.95
66-67 8 cyl., Ford 2v carb ..... 9B550-2 CALL
68-73 8 cyl., Ford 2v carb 9B550-2A 32.15
67-73 6 cyl., Carter 1v carb 9B550-1A 15.95

9B550 BRACKET, Dash Pot

66 Ford 2100 2v carb, repro 9B550-5A 9.95
NEW!



9F558 SWIVEL, Choke Plate Adjusting

66-73 Upper, nylon..... 9F558-1 9.95

9A586-6



9A586 REBUILD KIT, Carburetor

66-67 170, 200, Ford 1v 1100 carb #'s:C3TF-A,B,C,D,E,U,V,Y,Z; C3UF-A,B,F,G; C4TF-E,K,L, AV,AY,AZ,BA,BB,BC,BD,BE,BF,BG,BH,BJ,BK,B L; C4UF-A,C,D,G,K,L,R,S,T; C5PF-E,F,G; C5TF-G,H,J,M,N,R,AC,AH; C5UF-A,B,D,E,F,H,L,M; C6PF-K; C6TF-D,E,J,K,L,M,N; C6UF-A,B,C,D,G,H,S,T,U,V; C7TF-L,M,N,R,S; C7UF-A,B,C,D,E,F,G,H,K; C8PF-D,H,N,R..... 9A586-1 35.50
68-69 170, Carter 1v YF carb 4496, 4707, 7860, C8TF-A & BE F-9A586-12 16.95
68-69 170, Carter 1v YF style carb #'s: 4499, 4598, 4670, 4691, 4751, 4778, 4785, 4786, 4790, 4792, 4901, 4903, 4981, 4982, 6056-6059, 6061, 6063, 6162, 6176, 6177, 6180, 6239, 6240, 6241, 6244-6247, 6258, 6307, 6338, 6349, 6350, 6420, 6425, C8UF-G,M; C9TF-E,F,M; D0PF-AA; D2HF-KA; D2PF-XA F-9A586-13 16.95
70 170, Carter 1v YF style carb #'s: 6247, 7139, D0BF-A, D2BF-DA..... F-9A586-13 16.95
66-73 170, 200, Holley 1940 1v carb #'s: R4468, R4468-1, 4509, 4509-1, 4518, 4519, 4524-4528, 4532, 4533, 4535-4537, 4695, 4696, 4701, 6130-1,6130-2, 6130-3, 6220, 7105, 7610, 7860; D0PF-E,F,G,H,J,N,R,T,Y,Z 9A586-4 30.75
66-74 All w/Ford 2v model 2100 ..... 9A586-6 18.25
75 302, Ford 2100/2150 2v carb #'s D5PE-RA; D5TE-LA, PA, AZA, BAA, BHA, BKA, BLA F-9A586-9 30.95
75-76 302, Ford 2100/2150 2v carb #'s D5TE-BMA F-9A586-9 30.95
76 302, Ford 2100/2150 2v carb #'s D5TE-PA; D6TE-FA, MA, VA; D6PE-AJA, AKA; D6TE-GA, GB, YA, YB F-9A586-9 30.95
76 302, Ford 2100/2150 2v carb #'s D6TE-JA F-9A586-10 30.95
77 302, Ford 2100/2150 2v carb #'s D7TE-ABA; D7TE-ACA; D8PE-BCA F-9A586-10 30.95
77 302, Ford 2100/2150 2v carb #'s D7PE-UA, YA, ZA, AAA; D7TE-BYA; D8PE-CJA; D7TE-ZA; D7TE-ADA, AEA, AFA, AGA, BPA..... F-9A586-9 30.95
77 302, Ford 2100/2150 2v carb #'s D8PE-BBA F-9A586-11 56.95
77-78 302, Ford 2100/2150 2v carb #'s D7TE-BVB F-9A586-10 30.95

9J549-1



9J549 DIAPHRAGM, Choke Pull-Off

70-73 W/Ford 2100 2v carb 9J549-1 13.50

9A589-4



9A589 SPACER, Carb to Manifold

66-67 170, w/water passage 9A589-4A 61.95

9A589 MOUNTING KIT, Carb Studs/Nuts

65-74 W/1" spacer, 8 studs/nuts..... 9A589-1AK 8.00
66-74 W/3/8" spacer, 8 studs/nuts... 9A589-2AK 6.00
66-74 W/o spacer, 8 studs/nuts 9A589-6AK 6.00
66-74 Correct thin nuts only (4)..... 9510-1K 1.50

AIR CLEANER



9600-4



F-9600-4

9600 AIR CLEANER ASSY.

14 x 2" round, chrome, fits Holley and Ford 2v or 4v carbs 9600-4 24.95
14 x 5" round, chrome, extra tall for heavy duty or off road use, fits Holley and Ford 2v or 4v carbs C-3402-010A 38.95
COBRA oval, 21"l x 11h x 2 1/2"h, fits 2v or 4v carbs F-9600-4 124.95



9602 XSTREME AIR FILTER TOP, K&N

Use with most 14" air cleaners, replaces solid lid with K&N filter to improve air flow beyond a regular K&N filter. Top cover only-does not include standard element or base.

Black 9602-2A 75.25
Chrome..... 9602-2B 84.50
Blue 9602-2C 84.50



AIR FILTER, High Performance FIPK by K&N

Filter Charger Injection Performance kit Reduces intake restriction for maximum performance by replacing the plenum with a special filter and tube. Emission legal in 50 states

88-92 4.9l EFI..... F-9601-23 273.95
88-95 5.0l EFI, w/o mass air..... F-9601-23 273.95
94-96 5.0l EFI, w/mass air..... F-9601-24 173.50
88-95 5.8l EFI, w/o mass air..... F-9601-23 273.95
95-96 5.8l EFI, w/mass air..... F-9601-24 173.50

See following pages for both standard repalcement and performance K&N air filters.

RECHARGER, K & N Filter Service Kit

66-96 Includes 6.5oz. spray oil and 12oz. filter cleaner and decal. 9602-1 11.30

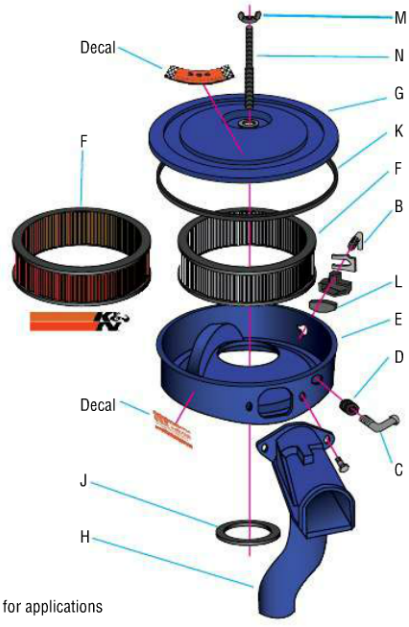

A 6758 Line, PCV
B 6A664 Hose, PCV
C 6767 Elbow, PCV hose
D 6A892 Grommet, PCV
E 9600 Air cleaner assy
F 9601 Filter, air
G 9602 Lid, air cleaner
H 9B632 Tube, hot air
J 9654 Gasket, AC base
K 9673 Seal, AC lid
L 9D697 Filter, PCV
M 358871 Wing nut
N 380958 Stud
Items in blue -check listings for applications



AIR FILTER, Dry Element Replacement

Our replacement filters are manufactured by such suppliers as Wix and Fram but come in a private label package. Listings are for dry element filters. Oil bath elements are not serviced. See chart for application listings.



AIR FILTER, HIGH PERFORMANCE by K&N

The world's best air filter! Warranted for 10 years or 1 million miles by K & N. Low restriction cotton fabric design can increase power without any other changes. Cleaning is req'd only about every 30,000-50,000 miles under normal use. See 9602-1 for service kit. Made in the USA for long life and top performance. See chart for application listings.

AIR FILTERS

Year	Engine/Application	Standard element Part#	Price	K&N Performance Part#	Price
	14 x 2" custom chrome #9600-4	9601-9	19.95	9601-9N	52.95
	14 x 5" custom tall #F-9600-2	F-9601-2	17.95	-	
	Motorsport 13" #F-9600-3	F-9601-3	11.10	F-9601-3A	50.25
	Oval, Shelby style #F-9600-4	9601-1	21.95	9601-1N	73.75
66-68	170	F-9601-54A	6.25	-	
68-72	170	F-9601-12A	7.95	9601-5N	46.50
73-74	200	F-9601-12A	7.95	9601-5N	46.50
66-68	289	F-9601-5	11.10	F-9601-11	43.25
80-81	300 (4.9l)	F-9601-5	11.10	F-9601-11	43.25
82-86	300 (4.9l)	F-9601-15A	9.25	F-9601-15	47.50
87-92	300 (4.9l), EFI	F-9601-19A	7.95	F-9601-19	50.75
69-77	302	F-9601-5	11.10	F-9601-11	43.25
78-79	302	F-9601-13A	7.35	F-9601-13	43.75
80-83	302 (5.0l), 2v	F-9601-13A	7.35	F-9601-13	43.75
84-85	302 (5.0l), 2v	F-9601-13A	7.35	F-9601-13	43.75
85-86	302 (5.0l), EFI	F-9601-18A	13.50	F-9601-18	55.50
87-96	302 (5.0l), EFI	F-9601-19A	7.95	F-9601-19	50.75
80-83	351W (5.8l)	F-9601-13A	7.35	F-9601-13	43.75
84-85	351W (5.8l), 2v	F-9601-13A	7.35	F-9601-13	43.75
84-87	351W (5.8l), 4v	F-9601-3	11.10	F-9601-3A	50.25
87-98	351W (5.8l), EFI	F-9601-19A	7.95	F-9601-19	50.75
78-79	351M, 400 (6.6l)	F-9601-13A	7.35	F-9601-13	43.75



CRANKCASE AIR FILTER, Replacement

87-93 EFI gas eng's F-9D695-1 7.35
94-96 EFI gas eng's F-9D695-2 5.80

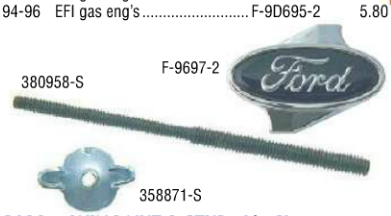

9600 WING NUT & STUD, Air Cleaner

Stud, cut to fit, 5/16" nut end, 3/8" carb 380958-SR 6.95
6 cyl., wing nut w/shaft as original 359197-S 1.60
Wing nut w/dimple, concours 358871-S 1.25
Std. w/correct indents for secure locking T-9600-5 0.75
Special-blue Ford oval and chrome F-9697-2 9.25



9B632 TUBE, Air Cleaner Warm Air

69-72 Exh. man. heat shield to AC snorkel, approx. 5 3/4" long 9B632-1 15.37
NEW! 73-79 Cut as reqd, 2" I.D. x 18" long 9B632-1 15.37

9654 GASKET, Air Cleaner Base at Carb

70 200, 2.65" I.D. x 3.12" O.D. ... 9654-1 1.55
66-73 8 cyl. w/Ford or Holley carb ... 9654-2 3.65



9673 SEAL, Air Cleaner Lid

Cut as required.

1/4" square x 45" long 9673-0A 4.25
1/2 x 3/8" oval x 60" 9673-1A 3.50
1/2" "D" shaped x 58" 9673-2A 3.50

9697 GROMMET, Air Cleaner

66-77 289, 302, .25" I.D. x 1.00" O.D. x .10" TK, use w/6767 elbow F-9697-3A 5.00
72-74 6 cyl. , .25" I.D. x 1.00" O.D. x .10" TK use w/6767 elbow F-9697-3A 5.00

CHOKE



9700 CONTROL CABLE ASSY, Choke

66-69 Manual choke, repro, chrome bezel F-9700-13A 24.95

17513 KNOB, Choke

68-77 Choke knob, repro F-17513-6A 12.50

ACCELERATOR PEDAL/LINKAGE



9725/9735 PEDAL, Accelerator

66-77 ..... F-9725-4 191.00
78-79 ..... F-9735-6 12.50
91-96 (from 10/91) F-9725-4 191.00



9825/6 CLIP, Rod End Clevis

73-77 302, accelerator clevis rod, RH 9825-1 0.50
73-77 LH 9826-1 0.55



9873 BUSHING, Gas Pedal Hinge

66-77 Nylon, pair F-9873-1 1.00

9793 SEAL, Accelerator Pedal Rod to Firewall

66-77 289, 302 ..... F-9793-1 9.95



9A758 CABLE, Accelerator

83-86	300 (4.9l)	F-9A758-4	44.95
87-89	300 (4.9l), w/AOD A/T	F-9A758-5	38.75
87-89	300 (4.9l), w/C6 A/T or M/T	F-9A758-5	38.75
90-91	300 (4.9l) EFI, M/T	F-9A758-6	29.50
80-85	302-2v (5.0l)	F-9A758-1	33.25
85-90	(b4 3/90), 302 (5.0l), w/AOD A/T	F-9A758-10	54.95
86-90	(b4 3/90), 302 (5.0l) EFI, w/M/T or C6 A/T	F-9A758-10	54.95
90-91	(from 3/90), 302 (5.0l) EFI	F-9A758-6	29.50
92-93	302 (5.0l), AOD A/T	F-9A758-11	16.95
92-94	302 (5.0l), E4OD, C6, M/T	F-9A758-8	16.95
79	351M, original Ford tooling	F-9A758-9	39.95
80-85	351W-2v (5.8l)	F-9A758-1	33.25
85-90	(b4 3/90), 351W (5.8l), EFI, w/AOD A/T	F-9A758-10	54.95
85-90	(b4 3/90), 351W (5.8l), M/T or C6 A/T	F-9A758-10	54.95
92-94	351W (5.8l), E4OD, C6, M/T	F-9A758-8	16.95
91-92	351W (5.8l), w/AOD A/T	F-9A758-11	16.95
91-92	351W (5.8l), C6 A/T or E4OD	F-9A758-8	16.95
79	400, original Ford tooling	F-9A758-9	39.95

ENGINE MANAGEMENT/SENSORS

See also ENGINE and IGNITION sections.

Engine Management

6C315 SENSOR, Crankshaft Position NEW!

Replacements fit only those parts with the listed ID numbers.

96	5.0l, VIN code N	F-6C315-1A	168.95
96	5.8l, VIN code H	F-6C315-1A	168.95

9G428 SENSOR, EGR Valve NEW!

Replacements fit only those parts with the listed ID numbers.

87-92	4.9l, ID# E7TF-AA	F-9G428-2A	35.60
87-92	5.0l, ID# E7TF-AA	F-9G428-2A	35.60
81-82	5.0l, ID# D9AE-A1A, A4A, A5A	F-9G428-1A	76.50
83-85	5.0l, ID# E43F-A1A, A2A, A1B	F-9G428-1A	76.50
83-86	5.0l, ID# E5AF-A1A, A2A	F-9G428-2A	35.60
81-85	5.8l 2v, ID# E43F-A1A, A1B, A2, A2A	F-9G428-1A	76.50
88-92	5.8l, ID# E7TF-AA	F-9G428-2A	35.60



1A

9E453 RESERVOIR, EGR Vacuum NEW!

Replacements fit only those parts with the listed ID numbers.

80	4.9l, Canada, ID# D52E-9E453-AA, E6TE-9E453-AA	F-9E453-1A	31.65
86-89	5.0l	F-9E453-2A	38.32



9F472 SENSOR, Oxygen NEW!

Replacements fit only those parts with the listed ID numbers.

78-83	OE style connector, 1 sensor lead 4.25" long ID# E3BF-AA, E3EF-AA	F-9F472-1A	30.25
84-86	4.9l, OE style connector, 1 sensor lead 13" long, ID# E3EF-AA, E47F-AA	F-9F472-2A	33.95
87-91	4.9l, 5.0l, 5.8l, 3 sensor leads	F-9F472-3A	56.95
90-96	4.9l, 5.0l, 5.8l, 4 sensor leads, each, vehicles with 2 sensors should replace both at the same time	F-9F472-4A	58.50
85	5.0l, OE style connector, 1 sensor lead 4.25" long, ID# E3BF-AA, E3EF-AA, E4TF	F-9F472-1A	30.25
85-86	5.0l, 5.8l, OE style connector, 1 sensor lead 13" long, ID# E3EF-AA, E47F-AA, E4TF	F-9F472-2A	33.95
84-85	5.8l, OE style connector, 1 sensor lead 4.25" long, ID# E3BF-AA, E3EF-AA, E4TF	F-9F472-1A	30.25



9F474 FILTER, EGR Solenoid Vacuum Valve NEW!

Replacements fit only those parts with the listed ID numbers.

76	302, excl Calif.	F-9F474-1A	10.28
77	351, Calif.	F-9F474-1A	10.28
79	351, Calif.	F-9F474-1A	10.28
80-89	Excl EFI	F-9F474-1A	10.28



9D475-1A

9H473/9D475/9D448 EGR VALVE NEW!

Replacements fit only those parts with the listed ID numbers. Incl gasket

82-83	5.8l, ID# E1PZ-9H473-B1A	F-9H473-1A	153.95
80	4.9l, incl gasket, ID# D8BE-9D475-E1A, E2A, D8BZ-9D475-EA	F-9D475-9A	87.50
80	4.9l, incl gasket, ID# E0TE-9D448-Z1A, Z2A, E0UE-9D448-D2A	F-9D448-10A	110.95
80-81	4.9l, incl gasket, ID# E0TE-9D448-U1A, U2A, E1YE-9D448-L1A, L2A	F-9D448-6A	130.95
82	4.9l, incl gasket, ID# E2TE-9D448-D2A, K1A, K2A	F-9D448-6A	130.95
82	4.9l, incl gasket, ID# E2TE-9D448-U1A, U2A	F-9D448-7A	109.95
82	4.9l, incl gasket, ID# E2TE-9D448-J1A, J2A	F-9D448-3A	105.95
82-83	4.9l, incl gasket, ID# E3UE-9D448-A1A, A2A	F-9D448-5A	92.50
83	4.9l, incl gasket, ID# E3TE-9D448-A1B, A1G, A2B, A2G, J1A, J2A	F-9D448-2A	108.50
83	4.9l, incl gasket, ID# E3TE-9D448-K1A, K2A	F-9D448-10A	110.95
83	4.9l, incl gasket, ID# E3TE-9D448-A1K, A2K	F-9D448-6A	130.95
83	4.9l, incl gasket, ID# E2UE-9D448-A1A, A2A	F-9D448-7A	109.95
83-85	4.9l, incl gasket, ID# E3TE-9D448-B1A, B2A, E1A, E2A	F-9D448-7A	109.95
83-85	4.9l, incl gasket, ID# E3TE-9D448-N1A, N2A	F-9D448-10A	110.95
83-85	4.9l, incl gasket, ID# E3TE-9D448-R1A, R2A	F-9D448-3A	105.95
84-85	4.9l, incl gasket, ID# E4TE-9D448-B1A, B2A, C1A, C2A, E1A, E2A	F-9D448-3A	105.95
84-85	4.9l, incl gasket, ID# E4TE-9D448-D1A, D2A	F-9D448-10A	110.95
86	4.9l incl gasket, ID# E3TE-9D448-R1A, R2A, E4TE-9D448-B1A, B2A, C1A, C2A, D1A, D2A, E1A, E2A, N1A, N2A	F-9D448-3A	105.95
87-89	4.9l EFI, incl gasket, ID# E7PE-9H473-A2A, E7PZ-9H473-C	F-9D473-8A	171.95
88-91	4.9l EFI, incl gasket, ID# E8TE-D2A	F-9D473-8A	171.95
90-91	4.9l, incl gasket, ID# E7PZ-9H473-A	F-9D473-8A	171.95
92-95	4.9l, incl gasket, ID# E8TE-D2A	F-9D473-8A	171.95
92-94	4.9l, incl gasket, ID# E9PZ-9H473-D	F-9D473-4A	198.95
92-94	4.9l, incl gasket, ID# E6PE-9H473-BA	F-9D473-1A	196.95
73-75	302, incl gasket, ID# D4TE-9D475-K1A, D4TE-9D475-K2A, D4TA-9D475-K	9D475-1A	83.75
73-77	302, Calif., incl gasket, ID# D3OE-9D475-C1A, D3OE-9D475-C2A, D3OE-9D475-CA, D3OZ-9D475-C, D4OE-9D475-A1A, D4OE-9D475-A2A	9D475-1A	83.75
73-78	302, incl gasket, ID# D4TE-9D475-J1A, J2A, J	9D475-1A	83.75
73-77	302, excl Calif., incl gasket, ID# D5TE-9D475-C1B, D5TE-9D475-C2B, D5TZ-9D475-C	F-9D475-3A	73.95
73-75	302, Calif., incl gasket, ID# D5TE-9D475-C1B	F-9D475-3A	73.95
76	302, incl gasket, ID# D5OE-9D475-A1A	9D475-1A	83.75
76	302, incl gasket, ID# D5AE-9D475-A1A, D5AE-9D475-A2A, D5AZ-9D475-A	F-9D475-4A	65.50
77	302, incl gasket, ID# D7TE-9D448-E1A, D7TE-9D448-E2A, D7TE-9D448-E3A	F-9D448-2A	108.50
77	302, excl Calif. or high altitude, incl gasket, ID# D7TE-9D448-A1A, A2A, A3A, M1A, M2A, M3A	F-9D448-6A	130.95
77	302, excl Calif. or high altitude, incl gasket, ID# D8ZE-9D448-A1A, A2A, A3A	F-9D448-6A	130.95
77	302, high altitude, incl gasket, ID# D7TE-9D448-J1A, J2A, J3A	F-9D448-4A	145.95
77	302, high altitude, incl gasket, ID# D7ZE-9D448-A2A, D7ZE-9D448-A3A, D8DE-9D448	F-9D448-2A	108.50
77	302, Calif., incl gasket, ID# D7TE-9D448-B1A, B2A, 3A	F-9D448-2A	108.50
77	302, Calif., incl gasket, ID# E3UE-A1A, A2A	F-9D448-5A	92.50
78	302, excl Calif., incl gasket, ID# D8ZE-9D448-B1A, B2A, B3A, D8ZZ-9D448-B	F-9D448-6A	130.95
78	302, Calif., incl gasket, ID# D8TE-9D448-L2A	F-9D448-6A	130.95
78	302, Calif., incl gasket, ID# D8UE-9D448-F2A, F1A	F-9D448-2A	108.50
78-79	302, incl gasket, ID# D8UE-9D488-F1A	F-9D448-2A	108.50
79	302, incl gasket, ID# D8DE-9D448-B1A, B2A, B3A, D9TE-9D448-F1A, F2A	F-9D448-2A	108.50
79	302, incl gasket, ID# D8ZE-9D448-A1A, A2A, A3A	F-9D448-6A	130.95

80	5.0l, 5.8l, incl gasket, ID# E0TE-9D448-N1A, N2A, E0UE-9D448-U1A	F-9D448-6A	130.95
80	5.0l, incl gasket, ID# E0TE-9D448-K1A, U1A, U2A, E0UE-9D448-C1A, S1A, V1A	F-9D448-6A	130.95
80	5.0l, incl gasket, ID# E0AE-9D448-B1A, E0TE-9D448-P1A, S1A, S2A, T1A	F-9D448-2A	108.50
80-81	5.0l, incl gasket, ID# E0TE-9D448-L1A, L2A, R1A, R2A	F-9D448-2A	108.50
80-82	5.0l, incl gasket, ID# E3UE-9D448-A1A, A2A	F-9D448-5A	92.50
81-82	5.0l, incl gasket, ID# E0SE-9D448-B1A, E0TE-9D448-J1A, J2A, E1TE-9D448-U1A	F-9D448-2A	108.50
81-82	5.0l, incl gasket, ID# E0OE-9D448-L1A, L2A, E1TE-9D448-R1A	F-9D448-3A	105.95
81-82	5.0l, incl gasket, ID# E0UE-9D448-B1A, B2A, E1A, E2A, E1UE-9D448-N1A	F-9D448-7A	109.95
82	5.0l 2v, incl gasket, ID# E0TE-9D448-J1A, J2A, L1A, L2A, R1A, R2A	F-9D448-2A	108.50
82	5.0l 2v, incl gasket, ID# E1TE-9D448-R1A, E2TE-9D448-P1A	F-9D448-3A	105.95
82	5.0l EFI, ID# E1PZ-9H476-B1A	F-9H473-1A	153.95
82-83	5.0l EFI, ID# E1PZ-9H473-B2A	F-9H473-1A	153.95
83-85	5.0l, ID# E5PE-H473-HA	F-9H473-2A	144.95
83	5.0l 2v, incl gasket, ID# E3UE-9D448-A1A, A2A	F-9D448-5A	92.50
83	5.0l 2v, incl gasket, ID# E3TE-9D448-A1C, A1D, A1E, A1F, A2C, A2D	F-9D448-2A	108.50
84	5.0l 2v, ID# E5PE-9H473-HA	F-9H473-2A	144.95
84	5.0l 2v, incl gasket, ID# E4TE-9D448-A1A, A2A, F1A, F2A	F-9D448-2A	108.50
85	5.0l, ID# E5PE-9H473-AA	F-9H473-3A	222.95
86-89	5.0l, incl gasket, ID# E6PE-9H473-B, BA, E7PE-9H473-EA	F-9D473-1A	196.95
90-91	5.0l, incl gasket, ID# E6PZ-9H473-B	F-9D473-1A	196.95
92-94	5.0l, incl gasket, ID# E6PE-9H473-BA	F-9D473-1A	196.95
95	5.0l, incl gasket, Calif., ID# E6PE-B2A, E7TE-F2A, F4A, E3TE-D2A, D4A	F-9D473-1A	196.95
95	5.0l, incl gasket, E4OD, ID# E6PE-B2A, E7TE-F2A, F4A, F3TE-D2A, D4A	F-9D473-1A	196.95
95	5.0l, incl gasket, excl Massachusetts & Calif., ID# E3TE-D2A, D4A	F-9D473-1A	196.95
95	5.0l, incl gasket, ID# F3TE-C2A, D4A, E6PE-B2A, E7TE-F2A, F4A	F-9D473-1A	196.95
78-79	351, incl gasket, ID# E3UE-9D448-A1A, A2A	F-9D448-5A	92.50
78	351, excl Calif. or high altitude, incl gasket, ID# D9TE-9D475-C1A	F-9D475-6A	81.50
78-79	351, excl Calif., incl gasket, ID# D8TE-9D475-A1A, A2A, D9TE-9D475-C1A, C2A	F-9D475-5A	90.25
78	351, excl Calif. or high altitude, incl gasket, ID# D8TE-9D448-E1A, E2A, E3A, D8TZ-9D448-S	F-9D448-2A	108.50
78	351, excl Calif. or high altitude, incl gasket, ID# D8UE-9D448-E1A, E2A, E3A	F-9D448-1A	64.95
78	351, high altitude, incl gasket, ID# D8TE-9D448-M1A, M2A, M3A, D8UE-9D448-F1A, F2A	F-9D448-2A	108.50
78	351, high altitude, incl gasket, ID# D8UE-9D448-G1A, G2A, G3A	F-9D448-3A	105.95
78	351, Calif., incl gasket, ID# D8UE-9D448-D1A	F-9D448-1A	64.95
78	351, Calif., incl gasket, ID# D8TE-9D475-A1A, A2A, D9TE-9D475-C1A, C2A	F-9D475-5A	90.25
78-79	351, Calif., incl gasket, ID# E3UE-9D488-A1A, A2A	F-9D448-5A	92.50
79	351, incl gasket, ID# D8TE-9D448-1JA, J2A, J3A	F-9D448-2A	108.50
79	351, excl Canada, incl gasket, ID# D8UE-9D448-F1A, F2A	F-9D448-2A	108.50
79	351, excl Canada, incl gasket, ID# D8OE-9D448-D1A, D2A, D3A	F-9D448-2A	91.50
79	351, Canada, incl gasket, ID# D8DE-9D475-C1A, C2A, D8DZ-9D475-CA	F-9D475-7A	91.50
79	351, Canada, incl gasket, ID# D8TE-9D475-A1A, A2A, C1A, C2A	F-9D475-5A	90.25
79	351, Canada, incl gasket, ID# D9UE-9D448-A1A, A2A	F-9D448-3A	105.95
79	351, Canada, incl gasket, ID# D9UE-9D448-F1A	F-9D448-1A	64.95
80	5.8l, incl gasket, ID# E0UE-9D448-P1A, P2A	F-9D448-3A	105.95
80	5.8l, incl gasket, ID# E0DE-9D448-B1A, B2A, E0TZ-9D448-N	F-9D448-6A	130.95
80	5.8l, incl gasket, ID# D8DE-9D475-C1A, C2A, CA	F-9D475-7A	91.50
80-83	5.8l, incl gasket, ID# E3UE-9D448-A1A, A2A	F-9D448-5A	92.50
81	5.8l, incl gasket, ID# E1TE-9D448-S1A, S2A	F-9D448-6A	130.95
81	5.8l, incl gasket, ID# E2TE-9D448-M1A, M2A	F-9D448-2A	108.50
84-85	5.8l 4v, incl gasket, ID# E4TZ-9D448-A	F-9D448-2A	108.50
84-86	5.8l, incl gasket, ID# E4SE-9D448-A1A, A2A, E4SZ-9D448-A	F-9D448-2A	108.50
86	5.8l, incl gasket, ID# E3TE-9D448-R1A, R2A, E4TE-9D448-B1A, B2A, C1A, C2A, D1A, D2A, E1A, E2A, N1A, N2A	F-9D448-3A	105.95
87	5.8l, incl gasket, ID# E6PZ-9D475-R	F-9D475-10A	96.50
88-91	5.8l, incl gasket, ID# E8PZ-9D473-A	F-9D473-3A	190.95
92-93	5.8l, incl gasket, ID# E8TE-9F483-B4A, F2TE-9F483-E2A, E4A	F-9D473-3A	190.95
92-94	5.8l, incl gasket, ID# E8TE-9F483-B2A	F-9D473-3A	190.95
95	5.8l, Massachusetts & Calif., incl gasket, ID# F4TE-A2A, A4A	F-9D473-6A	139.95
95	5.8l, excl Massachusetts & Calif., incl gasket, ID# E3TE-E2A, E4A	F-9D473-3A	190.95
95-96	5.8l, incl gasket, ID# F3TE-E2A, E4A	F-9D473-3A	190.95
96	5.8l, incl gasket, ID# F4TE-A2A, A4A	F-9D473-6A	139.95
78-79	400, excl Calif., incl gasket, ID# D8TE-9D475-A1A, A2A, D9TE-9D475-C1A, C2A	F-9D475-5A	90.25
78-79	400, Calif., incl gasket, ID# D8TE-9D475-A1A, A2A, D9TE-9D475-C1A, C2A	F-9D475-5A	90.25
78	400, Calif., incl gasket, ID# E3UE-9D448-A1A, A2A	F-9D448-5A	92.50
78-79	400, incl gasket, ID# E3UE-9D448-A1A, A2A	F-9D448-5A	92.50
79	400, Canada, incl gasket, ID# D8DE-9D475-C1A, C2A, D8DZ-9D475-CA	F-9D475-7A	91.50
79	400, Canada, incl gasket, ID# D8TE-9D475-A1A, A2A, C1A, C2A	F-9D475-5A	90.25
79	400, incl gasket, ID# D8UE-9D448-F3A	F-9D448-2A	108.50
79	400, excl Canada, incl gasket, ID# D8UE-9D448-F1A, F2A	F-9D448-2A	108.50



3A

NEW!

9F479 SENSOR, Manifold Air Pressure, Barometric

Replacements fit only those parts with the listed ID numbers.

81-83	ID# E1AF-12A680-A2A, E3TF-9F479-AA, BA	F-9F479-1A	411.95
84-93	ID# E43Z-B, E6FZ-A, E7FZ-A, AA	F-9F479-2A	107.95
90-91	4.9l	F-9F479-3A	76.95



NEW!

9A487 CHECK VALVE, Emissions

Replacements fit only those parts with the listed ID numbers.

66-74	170, 200, 3/4"-14 fitting on one end, hose nipple on opposite end, ID# E9VZ-A	9A487-1A	42.75
80-81	4.9l, 3/4"-14 fitting on one end, hose nipple on opposite end, ID# E9VZ-A	9A487-1A	42.75
81	4.9l, excl Calif., ID# E7TZ-9A487-D	F-9A487-1A	15.25
82	4.9l, 3/4"-14 fitting on one end, hose nipple on opposite end, ID# E9VZ-A	9A487-1A	42.75
82-83	4.9l, 3/4"-14 fitting on one end, ID# D4AZ-9A487-A	F-9A487-1A	15.25
83-86	4.9l, ID# D6TZ-9A487-B	F-9A487-2A	79.95
87-91	4.9l, ID# E7TE-9A487-DA	F-9A487-4A	79.95
90-92	4.9l, ID# E7TZ-B	F-9A487-4A	79.95
93	4.9l, ID# E7TE-9A487-DA	F-9A487-4A	79.95
70	302, 3/4"-14 fitting on one end, hose nipple on opposite end	9A487-1A	42.75
72-73	302, 3/4"-14 fitting on one end, hose nipple on opposite end	9A487-1A	42.75
75-79	302, LH side, ID# D5TZ-9A487-F	F-9A487-8A	80.25
80-81	5.0l, 3/4"-14 fitting on one end, hose nipple on opposite end, ID# E9VZ-A	9A487-1A	42.75
83	5.0l, ID# E3TZ-B	F-9A487-10A	29.70
82-85	5.0l, 3/4"-14 fitting on one end, hose nipple on opposite end, ID# E9VZ-A	9A487-1A	42.75
86	5.8l, 3/4"-14 fitting on one end, hose nipple on opposite end, ID# E9VZ-A	9A487-1A	42.75
86-89	5.0l, 3/4"-14 fitting on one end, hose nipple on opposite end, ID# E9VZ-A	9A487-1A	42.75
90-92	5.0l, hose nipple on both ends, ID# E8DZ-A	F-9A487-5A	29.50
90-92	5.0l, 3/4"-14 fitting on one end, hose nipple on opposite end, ID# E9VZ-A	9A487-1A	42.75
93-94	5.0l, downstream, hose nipple on both ends, ID# E8DE-9A487-AA	F-9A487-5A	29.50
93-94	5.0l, upstream, 3/4"-14 fitting on one end, hose nipple on opposite end, ID# E9VZ-A	9A487-1A	42.75
95	5.0l, 3/4"-14 fitting on one end, hose nipple on opposite end, ID# E9VZ-A	9A487-1A	42.75
80	5.8l, 3/4"-14 fitting on one end, hose nipple on opposite end, ID# E9VZ-A	9A487-1A	42.75
81-85	5.8l, 3/4"-14 fitting on one end, hose nipple on opposite end, ID# E9VZ-A	9A487-1A	42.75
82-83	5.8l, hose nipple on both ends, ID# D9AZ-C	F-9A487-9A	47.60
84-85	5.8l, hose nipple on both ends, ID# E8DZ-A	F-9A487-5A	29.50
86-87	5.8l, 3/4"-14 fitting on one end, hose nipple on opposite end, ID# E9VZ-A	9A487-1A	42.75
86-88	5.8l, ID# E8DZ-A	F-9A487-11A	29.50
88-92	5.8l, 3/4"-14 fitting on one end, ID# E8TZ-B	F-9A487-1A	15.25
89-92	5.8l, hose nipple on both ends, ID# E8DZ-A	F-9A487-5A	29.50
92	5.8l, 3/4"-14 fitting on one end, E4OD A/T, ID# E8TZ-B	F-9A487-1A	15.25
93-94	5.8l, downstream, hose nipple on both ends, ID# E8DE-9A487-AA	F-9A487-5A	29.50
93-94	5.8l, 3/4"-14 fitting on one end, upstream, ID# D4AZ-9A487-A	F-9A487-1A	15.25
93-94	5.8l, downstream, ID# E7TZ-E	F-9A487-11A	50.60
95-96	5.8l, 3/4"-14 fitting on one end, ID# F3TZ-9A487-C	F-9A487-1A	15.25

9F490 REGULATOR VALVE, Emission Vacuum Control

NEW!

Replacements fit only those parts with the listed ID numbers.

80-82	5.0l, A/T, ID# D9BE-A2A	F-9F490-1A	34.95
80-83	5.0l, ID# D9BE-9F490-A2A	F-9F490-1A	34.95
81-82	5.0l, ID# D8DE-9F490-C2A	F-9F490-1A	34.95
86-87	5.8l, ID# D9BE-9F490-A2A	F-9F490-1A	34.95

9S553 SENSOR, Throttle Position

NEW!

Replacements fit only those parts with the listed ID numbers.

84	4.9l, excl EFI, ID# E4TF-AA	F-9S553-6A	58.95
85-86	4.9l, excl EFI, ID# E5DF-AA, E6CF-CA	F-9S553-7A	57.75
87	4.9l, ID# E6TF-AA	F-9S553-5A	80.25
90-92	4.9l, ID# E9TF-BA	F-9S553-19A	53.50
92	4.9l, ID# F2TF-AA	F-9S553-20A	65.95
83-84	5.0l, excl EFI, ID# E3TF-BB	F-9S553-2A	76.95
85	5.0l, excl EFI, ID# E5AF-AA	F-9S553-3A	60.95
85-87	5.0l, excl EFI, ID# E6TF-AA	F-9S553-5A	80.25
88	5.0l, ID# E5ZF-DA, E6ZF-BB, E7SF-BA	F-9S553-9A	64.95
89-90	5.0l, A/T, ID# E6TF-AA	F-9S553-5A	80.25
91	5.0l, ID# E6TF-AA	F-9S553-5A	80.25
92	5.0l, ID# E7TF-CA	F-9S553-5A	80.25
93	5.0l, ID# E6TF-AA	F-9S553-5A	80.25
95	5.0l, ID# E7TF-CA	F-9S553-5A	80.25
96	5.0l, ID# F6TF-AA	F-9S553-16A	85.25
84	5.8l, excl EFI, ID# E3TF-BB	F-9S553-2A	76.95
85	5.8l, M/T, excl EFI, ID# E3TF-BB	F-9S553-2A	76.95
85	5.8l, A/T, excl EFI, ID# E5AF-AA	F-9S553-3A	60.95
88-89	5.8l, ID# E5ZF-DA, E6ZF-BB, E7SF-BA	F-9S553-9A	64.95
90-91	5.8l, ID# E6TF-AA	F-9S553-5A	80.25
92	5.8l, ID# E7TF-CA	F-9S553-5A	80.25
93	5.8l, ID# E6TF-AA	F-9S553-5A	80.25
95-96	5.8l, ID# E7TF-CA	F-9S553-5A	80.25
96	5.8l, ID# F6TF-AA	F-9S553-16A	85.25



Brian Mangas



8A

9F715 VALVE, Idle Air Control

NEW!

Replacements fit only those parts with the listed ID numbers.

86-89	4.9l	F-9F715-2A	69.75
90	4.9l, excl Calif., ID# E9TE-AA, F0TE-AA	F-9F715-10A	132.95
90-93	4.9l, ID# F0TE-CA	F-9F715-9A	55.50
85	5.0l, ID# E9DE-A1A, E9EE-A1A	F-9F715-1A	78.50
85-86	5.0l, ID# E6AE-C1A, C1B	F-9F715-2A	69.75
87-93	5.0l, ID# E9TE-BA	F-9F715-3A	87.25
94-96	5.0l, 5.8l, ID# F4TE-AA	F-9F715-8A	85.50
88-89	5.8l, ID# E9TE-BA	F-9F715-3A	87.25
90-93	5.8l excl 91 w/ MFI, F1TE-BA, F2TE-BA	F-9F715-4A	89.25

9E862 VALVE, Thermal Air Temperature Control

NEW!

Replacements fit only those parts with the listed ID numbers.

75-86	ID# D5DF-9E862-AA, D5DZ-9E862-A	F-9E862-1A	28.25



9C915 VALVE, Canister Purge

NEW!

Replacements fit only those parts with the listed ID numbers.

95-96	5.8l, Calif., ID# F5TZ-A	F-9C915-8A	85.50
96	5.8l, ID# F5TZ-A	F-9C915-8A	85.50

12B579 SENSOR ASSY, Mass Air Meter

NEW!

Replacements fit only those parts with the listed ID numbers.

94	5.0l, ID# F5UF-12B579-AA	F-12B579-1A	CALL
95	5.0l, 5.8l, ID# F5UF-12B579-AA	F-12B579-1A	CALL
96	5.0l, 5.8l, ID# F5UF-12B579-BA	F-12B579-4A	CALL



1A

12A697 SENSOR, Air Charge Temperature

NEW!

Replacements fit only those parts with the listed ID numbers.

86-87	4.9l, ID# E7AF-AA	F-12A697-2A	102.50
86-89	4.9l, ID# E4AF-AA	F-12A697-1A	23.35
90-93	4.9l, ID# F2DF-AA	F-12A697-1A	23.35
86-87	5.0l, ID# E1AF-AA, E4AF-AA	F-12A697-1A	23.35
88-89	5.0l, ID# E4AF-AA	F-12A697-1A	23.35
90-93	5.0l, ID# F2DF-AA	F-12A697-1A	23.35
93-95	5.0l, ID# E7AF-AA, F32F-AA	F-12A697-2A	102.50
94-95	5.0l, ID# F3DF-AA	F-12A697-3A	39.70
94-95	5.0l, ID# E4AF-AA, F1AF-AA, F2DF-AA	F-12A697-1A	23.35
96	5.0l, ID# F5AF-AA	F-12A697-6A	34.25
96	5.0l, ID# F6SF-AA	F-12A697-5A	26.65
88-89	5.8l, ID# E4AF-AA	F-12A697-1A	23.35
90-93	5.8l, ID# F2DF-AA	F-12A697-1A	23.35
94-95	5.8l, ID# E4AF-AA, F1AF-AA, F2DF-AA	F-12A697-1A	23.35
95	5.8l, ID# F3DF-AA, F4TF-AA	F-12A697-3A	39.70
96	5.8l, ID# F6SZ-AA	F-12A697-5A	26.65
96	5.8l, ID# F5AF-AA	F-12A697-6A	34.25
96	5.8l, ID# F2DF-AA	F-12A697-1A	23.35



NEW!

12A648 SENSOR, Coolant Temperature

Replacements fit only those parts with the listed ID numbers.

96	5.8l, rectangular connector, ID# F5AF-AA	F-12A648-3A	27.65
79	5.8l, rounded connector, ID# E1AF-AA, E4AF-AA	F-12A648-1A	45.35
80-85	Rounded connector, ID# E0AF-AA, E1AF-AA, E4AF-AA	F-12A648-1A	45.35
86-91	4.9l, rounded connector, ID# E1AF-AA, E4AF-AA	F-12A648-1A	45.35
86-95	5.0l, 5.8l, rounded connector, ID# E1AF-AA, E4AF-AA, F1AF-BA, F2AF-AA	F-12A648-1A	45.35
91	4.9l, Ambient temperature sensor, rounded connector, ID# E4AF-AA	F-12A648-1A	45.35
92-94	4.9l, rounded connector, ID# E4AF-AA, F2AF-AA, F1AF-BA	F-12A648-1A	45.35
96	5.8l, rounded connector, ID# F2AF-AA	F-12A648-1A	45.35



EXHAUST MANIFOLD


9430-1A


F-9430-3


F-9430-5A
F-9430-5B


F-9430-6A


F-9430-15A


F-9430-10A


F-9430-12B


F-9430-14A

9430 EXHAUST MANIFOLD

Replacements except as noted.

66-74	170, 200, w/o IMCO, repro	9430-1A	129.95
84-86	300 (4.9l), O_2 hole, 1 EGR hole, one piece design	F-9430-3	291.95
90-92	300 (4.9l), "front"	F-9430-5A	119.95
90-92	300 (4.9l), "rear"	F-9430-5B	124.95
80-85	302 (5.0l), O_2 hole, RH	F-9430-6A	214.95
80-95	302 (5.0l), w/o exhaust control valve, LH	F-9430-6B	119.95
83-87	302 (5.0l), w/exhaust control valve, LH	F-9430-7D	119.95
86-96	302 (5.0l), O_2 hole, RH	F-9430-7C	119.95
96	302 (5.0l), O_2 hole, LH	F-9430-6B	119.95
78-79	351M (5.8l), RH	F-9430-15A	166.95
78-79	351M (5.8l), LH	F-9430-15B	183.95
81-87	351W (5.8l), O_2 hole, RH	F-9430-10A	134.95
81-83	351W (5.8l), (b4 04/83), w/o exhaust control valve, LH	F-9430-6B	119.95
83-87	351W (5.8l), (from 04/83), w/exhaust control valve, LH	F-9430-7D	119.95
85-87	351W (5.8l), 4 AIR holes, reqs heat riser between man. and pipe, LH	F-9430-11B	147.95
88-96	351W (5.8l), 4 AIR holes, LH	F-9430-12B	134.95
94-96	351W (5.8l), 2 EGR holes, RH	F-9430-14A	183.95
94-96	351W (5.8l), LH	F-9430-14B	183.95
78-79	400 (6.6l), RH	F-9430-15A	166.95
78-79	400 (6.6l), LH	F-9430-15B	183.95



9431 CAT4WARD SHORTY HEADERS, by JBA

Cutting edge design. HD features and patented technology. Engineered to install as easily as possible. Carb exempt and certified 50 state smog legal. 1 1/2" tube, 4 hr approximate professional install time.

86	5.0l	F-9431-10	648.95
87-95	5.0l	F-9431-11	434.95
87-95	5.0l, 409 stainless steel	F-9431-11C	448.95
96	5.0l	F-9431-10	648.95
86-96	5.8l, w/o air injection	F-9431-13	461.95
87-96	5.8l, w/port air injection	F-9431-14B	1034.95
87-96	5.8l, w/dual air injection	F-9431-15B	956.95

Stainless steel with titanium ceramic coating:

87-96	5.8l, w/port air injection	F-9431-14B	1034.95
87-96	5.8l, w/dual air injection	F-9431-15B	956.95





FLOWMASTER
THE EXHAUST TECHNOLOGY COMPANY

For the aggressive distinctly Flowmaster sound

5210 FLOWMASTER EXHAUST SYSTEM

FORCE II, single exhaust, side exit, 2.5" lead, 2.5" pipes, 50 series muffler, preset shpg chrg $20.00 - not eligible towards $300 free shipping offer:

90-96	5.0, 5.8l, will not fit 2 bolt flange	F-5210-58K	366.32

9432 BOLT KIT, Exhaust Manifold

Concours correct bolts (Ramp-Lok® washer design on 66-74's) for attaching manifold to head. Correct bolts for all years and engines!! IMCO=Emissions control device.

66-67	170, 200 excl IMCO	9432-1A	18.00
67-70	200 w/IMCO	9432-2A	18.00
66-67	289	9432-3A	22.00
68-72	289, 302, incl 4 studs	9432-5A	22.00
73-74	302 (b4 ser# 20001)	F-9432-25A	22.00

9434 STUD SET, Manifold to Exhaust Pipe

66-67	170, 200, (4)	9434-1K	7.00
66-86	289, 302, 351W	9434-2K	10.00



9C786 FITTING & SCREEN , Choke Stove Pipe

Screen packs inside exhaust manifold to keep choke piston from carbon and seizing up. Fitting plugs hole for screen in manifold and holds choke tube.

66-73	8 cyl.	9C786-1A	26.95


Brett Hauke

TRANSMISSION SECTION INFO

Automatic trans .....pg 72
Cooling/vacuum lines pg 73
Transfer case .....pg 74
M/T shifter .....pg 74
Clutch/pressure plate pg 76
A/T performance kits pg 72
A/T Shifter pg 73
Manual trans pg 74
Clutch pedal/linkage pg 75

AUTOMATIC TRANSMISSION



7052 OIL SEAL, Tailshaft Bearing Retainer

73-77 C4 ..... 7052-1 10.05



7986 INSPECTION PLATE

66-81 C4, zinc 7986-1 10.95
66-81 C4, chrome 7986-1A 14.95

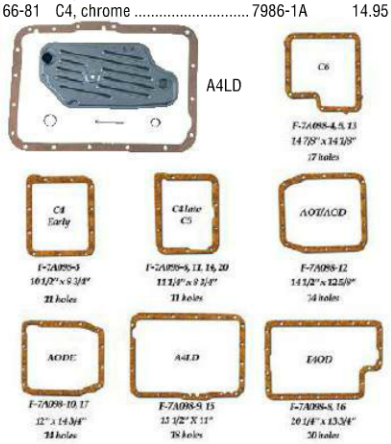

7A098 FILTER, Transmission Oil

Note all filters come with a new pan gasket.

65-69 C4, early 7A098-2 8.95
70-74 C4, late F-7A098-6 13.45
75-81 C4, late, deep pan F-7A098-18 10.85
80-96 C6, deep pan F-7A098-4 14.75
85-94 AOT/AOD F-7A098-7 28.95
89-96 E4OD, 8 cyl. F-7A098-8 62.25
91-93 A4LD F-7A098-15 29.95
94-96 AODE F-7A098-17 25.15



1

7A194 PAN, Trans Oil OE Style

67-84 C4, steel, repro F-7A194-1 32.95
67-84 C4, steel, repro, chrome 7A194-1C 22.95
67-84 C4, steel, replacement, now w/drain plug installed! 7A194-1B 20.95

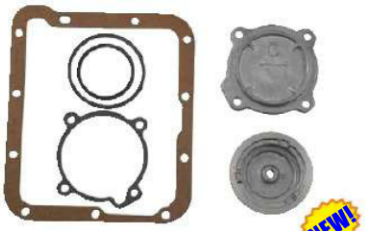

NEW!

7D027 "C" SERVO CONVERSION KIT

Exact repro of the Shelby "C" servo used to increase trans performance. Very easy to install, includes exact repro "C" logo servo cover & all necessary parts for the proper conversion.

65-77 C4 A/T 7D027-1A 177.95

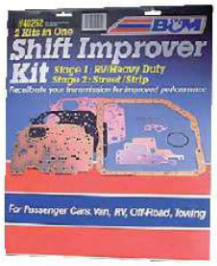

7101 B&M SHIFT IMPROVER KIT, Light Truck

Improves the shift feel and quickness on any stock automatic transmission. The kit provides an improved shift with the elimination of soft, sluggish shift overlap and excess wear on clutches and bands due to slippage.

67-69 C4 ..... 7101-1 39.75
70-82 C4 ..... 7101-2 37.95
67-91 C6 ..... 7101-3 37.95
80-92 AOD F-7101-4 44.95
93-96 AODE F-7101-5 89.95
91-96 E4OD F-7101-6 71.95



7102 B&M TRANS-PAK, Light Truck

The next stop beyond the Shift Improver Kit. The Trans-Pak offers all the features found in the 7101 improver kits plus provides for additional driver manual control. With Trans-Pak you can downshift at any speed and you can hold the transmission in first gear to any speed (engine allowing!) Down shifting is a valuable asset when towing a trailer or driving other heavily loaded vehicles downhill. Trans-Pak is a 2 or 3 stage kit. YOU select the mode that best suits your application at time of installation.

66 C4 ..... F-7102-1 69.95
67-69 C4 ..... F-7102-2 44.95
70-82 C4 ..... 7102-2 49.50
67-91 C6 ..... 7102-3 82.95
93-96 AODE F-7102-8 84.95
89-96 E4OD F-7102-9 94.50



F-7A194-1 F-7A194-3

7A194 PAN, Trans Oil

C4, chrome, finned, w/drain plug F-7A194-1 32.95
C6, chrome, finned, w/drain plug F-7A194-3 29.95



7A194 TRANS PAN, Finned Aluminum, B&M

Adds 3 qts. fluid capacity for increased performance and cooler fluid temperatures.

66-77 C4 ..... 7A194-1A 189.50
66-91 C6 ..... 7A194-2A 169.95
92-96 A0DE/4R70W F-7A194-5 199.95
80-92 AOD F-7A194-6 199.95
Replacement filter for above pan kits.. 7A098-6 15.50

7K194 CHROME BOLT KIT, Trans Oil Pan

14 pcs of 5/16"-18 x 3/4" hex head bolt F-7K194-1 11.75



7K177 OIL COOLER ASSY, Heavy Duty Transmission

Heavy duty unit by B&M has a unique patented "Stacked Plate" design that offers a 35% improvement in efficiency over fin and tube coolers. The 11" x 5 3/4" x 3/4" unit weighs only 2.5 pounds, but has a full 18,000# GVW rating! The self-regulating design feature bypasses cold transmission fluid automatically (without thermostats or valves) until its viscosity decreases and allows fluid to flow through the main body of the cooler.

66-96 9800 btu 7K177-2A 67.95

DERALE COOLING PRODUCTS

F-7K177-3 F-7K177-3A



Super HD design includes integrally mounted reversable 10" turbo fan capable of moving 650cfm of air! The black powder coated cooler unit is 10" x 16" x 3 7/8" (depth includes fan.) This unit is rated for up to 22,500 GVW! Mounting brackets are anodized billet aluminum.

66-96 ..... F-7K177-3 144.95

7K177 SWITCH, In-line Temperature

Switches F-7K177-3 fan on at 180 degrees.

66-96 ..... F-7K177-3A 23.50



TRICK SHIFT, Trans Fluid, B&M

66-96 Special blend developed for racing to help improve shift quality and trans life. Sold per quart bottle 19582-1 7.30



7A187 SHIFTPLUS, Electronic Shift Improver, B&M

Installs in minutes, reduces slippage, 50 state legal, requires trans code D,E,H,L,P,U or V from ID plate on drivers door post.

95-96 ..... F-7A187-10A 39.95

Fast Order Processing

Delivery in 1-3 days to most of the U.S.

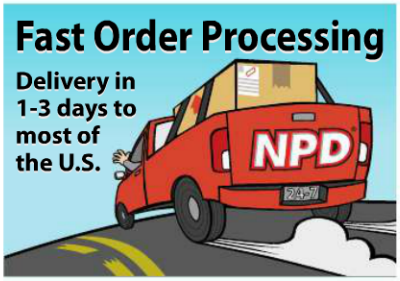

TRANS LINES-VACUUM & COOLING

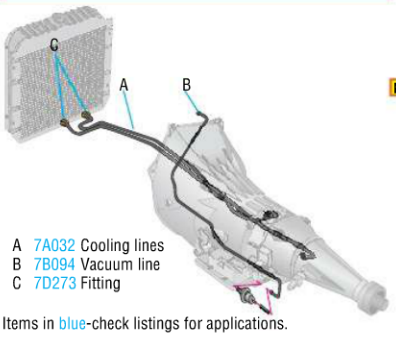

A 7A032 Cooling lines
B 7B094 Vacuum line
C 7D273 Fitting

Items in blue-check listings for applications.

7A032 COOLING LINES, Transmission Oil

Pre-bent lines of carbon or stainless steel. Duplicated against original lines using CNC computer bender for accuracy and consistency. Manufactured to exceed all DOT, SAE, and ISO specifications. Lines and fittings are 45 degree standard automotive specs. Stainless tubes are made from 304 seamless nonmagnetic stainless steel. All tubes are pressure tested to 6000 psi burst.

73-77	C4, carbon, 2 pc	F-7A032-11	CALL
	Stainless	F-7A032-11S	74.95
78-79	Carbon, 2 pc	F-7A032-12	54.95
	Stainless	F-7A032-12S	79.95
92	E4OD trans, carbon, 2 pc	F-7A032-13	64.95
	Stainless	F-7A032-13S	79.95

7B094 VACUUM LINES, Transmission

Pre-bent lines of carbon or stainless steel. Duplicated against original lines using CNC computer bender for accuracy and consistency. Manufactured to exceed all DOT, SAE, and ISO specifications. Lines and fittings are 45 degree standard automotive specs. Stainless tubes are made from 304 seamless nonmagnetic stainless steel All tubes are pressure tested to 6000 psi burst.

78-79	Carbon	F-7B094-5	24.95
	Stainless	F-7B094-5S	34.95



7D273 FITTING, Trans Line

To radiator, 5/16" trans line, not included with radiators and old ones are tough to remove, use pipe joint compound to seal threads to radiator.

80-96	5/16" hex head size, pair	F-7D273-1	9.95
80-96	11/16" hex head size, pair	F-7D273-2	5.25
80-96	3/4" hex head size, pair	F-7D273-3	4.25

SHIFTER

7A024 ROD, Transmission To Bellcrank Lever

NEW! 80-88 C6 ..... F-7A024-1 19.95



7A004 COVER, Trans Selector

Made on original Ford tooling.

74-77	302, w/C4	F-7A004-1	14.95
78-79	351, 400, w/C6, fixed wheel	F-7A004-3	14.95
78-79	351, 400, w/C6, tilt wheel	F-7A004-2	14.95



7B033 DIAL, Trans Control Selector

Made on original Ford tooling.

74-77	302, w/C4, original Ford tooling	F-7B033-3	19.95
78-79	351, 400, w/C6, fixed column, original Ford tooling	F-7B033-4	14.95

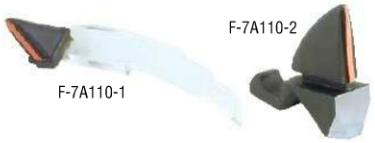

7A110 POINTER, Trans Control Selector

74-77	302, w/C4, original Ford tooling	F-7A110-1	11.95
78-79	351, 400, C6, fixed column, original Ford tooling	F-7A110-2	9.95
NEW! 80-89	C4, C5, C6, original	F-7A110-3	53.15
NEW! 83-86	AOD, original	F-7A110-4	62.32

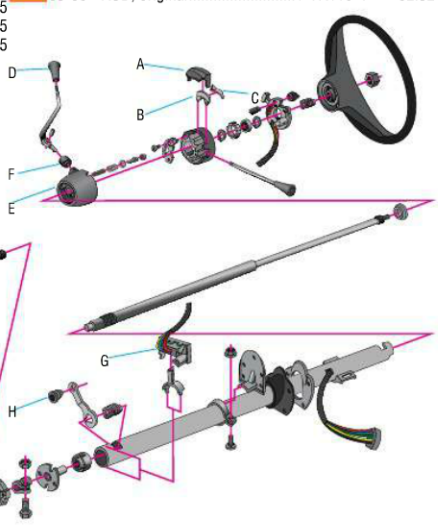

A 7A004 Cover, selector
B 7B033/15805 Dial, selector
C 7A110 Pointer, selector
D 7213 Knob, shifter
E 7228 Collar, steering column
F 7246 Insulator, shift lever
G 7A247 Switch, neutral start
H 7343 Bushing, shift arm

Items in blue-check listings for applications.



7213 KNOB, Automatic Gear Shifter

66-72	C4, floor shift	7213-1A	14.50
78-83	(b4 11/82), C4, C6	F-7213-15	14.95
83-89	(from 11/82), C4, C6	F-7213-25	39.95



7A213 DIAL HOUSING ASSY, Trans Control Selector

78-79	W/tilt column, original Ford tooling	F-7A213-1	35.00
80	A/T, original Ford tooling	F-7A213-2	CALL

NEW!

7246 INSULATOR, Automatic Gear Shift Lever

73-77	C4, column shift	F-7246-4	3.95
78-96	C4, C6	F-7246-4	3.95



7A247 SWITCH ASSY, Neutral Safety

Original or Motorcraft.

73-77	All V-8 w/C4	7A247-7	94.95
78-79	351, 400, w/C4, column shift.	F-7A247-4	94.95

Replacement

78-79	C4, C6, FMX	F-7A247-5A	113.95
83-85	C5, C6	F-7A247-7A	54.95
86-93	AOT, 4 pin, incl backup switch	F-7A247-6A	89.50
NEW! 87	AOT, w/ electronic transfer case, 5 pin, original	F-7A247-17	69.95
87	C6, 5 pin, electric transfer case	F-7A247-8A	79.95
87-89	C6, electric shift	F-7A247-9A	71.35
87-89	W/o electric shift	F-7A247-10A	80.50
NEW! 89	C6, ID# E9TP-7A247-AA	F-7A247-12A	81.50
90-94	E4OD	F-7A247-11A	78.25
90-91	C6	F-7A247-12A	81.50
93-96	AODE/4R70W, TRS, 8 pin	F-7A247-14A	83.95
94-96	4R70	F-7A247-14A	83.95
NEW! 95-96	E4OD, ID# E9TP-7A247-AC	F-7A247-11A	78.25



7228 COLLAR, Steering Column Upper

78-79	A/T, fixed column	F-7228-4	119.95
78-79	A/T, tilt column	F-7228-7	49.95
NEW! 80-91	C4, C6, OD, tilt wheel	F-7228-10	54.95

7341 BUSHING, Shifter Insulator

NEW! 80-91	C4, C6, AOD	7341-4	3.85

TRANSFER CASE

7213 KNOB, Transfer Case Shifter



66-73	(from 66 ser#830,001), original style	7213-1A	14.50



82-87		F-7213-17	8.32
88-89		F-7213-20	21.13



92-96	A/T	F-7213-19	9.98
90-96	M/T	F-7213-19	9.98

7B059/7B118/7277 BOOT, Transfer Case Shifter



66-77		F-7B059-1	24.95



66-77	Upper	F-7B118-1	CALL
78-79	8 cyl.	F-7277-2	74.85



90-96		F-7277-27	48.98

7335 BUSHING, Shifter Socket

NEW! 78-86	Transfer case shifter, 2 reqd	F-7335-2	2.50



7B360 MOTOR, Transfer Case, Rebuilt

87-96	W/electric transfer case, core chrg $80	F-7G360-1	88.95



7E440 SWITCH ASSY, Transfer Case Lock-out Light

80-87		F-7E440-2	23.95

MANUAL TRANSMISSION



7052 REAR OIL SEAL, Tail Shaft Housing

66-77	(b4 7/1/71), w/Ford 3sM/T, on housing	7052-1	10.05

SHIFTER PARTS

7E074 COVER PAD, Transmission Shift

NEW! 87-91	5sM/T	F-7E074-1	24.95



7B125 TRUNNION, Shift Lever, Centering

70-73	3sM/T	7B125-1	3.95

7210 LEVER ASSY, Shifter

NEW! 80-86	4sM/T, repro	F-7210-1	49.95



7213 KNOB, Gear Shift

82-87	M/T, excl 5sM/T ZF	F-7213-17	8.32
88-93	4sM/T Warner T18, incl insert	F-7213-22	8.32
88-89	5sM/T	F-7213-23	16.65



7228 COLLAR, Steering Column Upper

78-79	3sM/T	F-7228-3	22.50



7246 INSULATOR, Gear Shift Lever

73-77	3sM/T, column shift	F-7246-3	12.00
80-87	3sM/T, column shift	F-7246-4	3.95

7277 BOOT, Shifter



67-69	4sM/T New Process 435	F-7277-1	CALL



84-86	4sM/T	F-7277-11	39.95
88-96	5sM/T Mazda, inner	F-7277-15	42.98



90-93	4sM/T T18, inner	F-7277-6	17.50
90-96	5sM/T Mazda, outer	F-7277-18	58.98



7302 ARM, Column Shift Lever

66-77	M/T, column shift 2nd and 3rd gear	F-7302-1	19.95



7303 ARM, Column Shift Lever

66-77	M/T, column shift 1st and reverse gear	F-7303-1	19.95

7343 BUSHING & INSULATOR, Trans Selector Arm

66-77	3sM/T	F-7343-2A	9.95

NEW!

7D363 THRUST WASHER, Column Gear Shift

66-77	M/T, 2 reqd	F-7D363-1	2.00

CLUTCH PEDAL & LINKAGE

Items in blue -check listings for applications

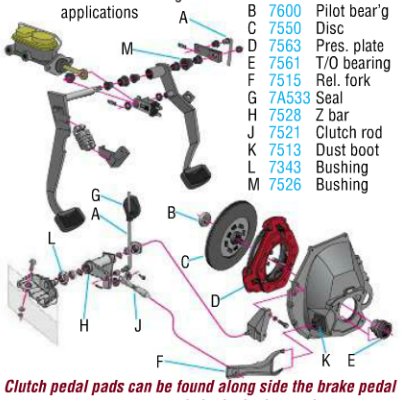

A	7521	Clutch rod
B	7600	Pilot bear'g
C	7550	Disc
D	7563	Pres. plate
E	7561	T/O bearing
F	7515	Rel. fork
G	7A533	Seal
H	7528	Z bar
J	7521	Clutch rod
K	7513	Dust boot
L	7343	Bushing
M	7526	Bushing

Clutch pedal pads can be found along side the brake pedal pads in the brake section.



7343 BUSHING, Clutch Pivot Trunnion

66-77	3sM/T, (4)	F-7343-2	30.73



7507 SHAFT BALL & BRACKET, Equalizer

NEW!	80-96	Solid billet steel base with ball stud, stronger than originals	F-7507-4A	69.95

7C508 PIVOT SEAT, Clutch Fork Pivot

79	400	F-7C508-2	7.95



7513 DUST SHIELD, Release Lever

66-77	289, 302, original	F-7513-1	14.53
66-77	289, 302, repro	F-7513-1A	11.50
78-79	351M, 400	F-7513-5	14.95



7515 RELEASE FORK, Clutch

80-82	300, 302	F-7515-10	34.95
81-82	351W	F-7515-10	34.95
84-89	300, 302, 351W	F-7515-11	34.95
90-96	4.9l, 5.0l, 5.8l	F-7515-11	34.95

NEW!



7521 ROD, Clutch Release Lower

66-77	Lower adjuster	F-7521-9	24.95

7522 FULCRUM, Clutch Release Lever

68-77	8 cyl., on bellhousing, improved repro, metal thickness same as original	7522-3B	29.95

7526 BUSHING, Clutch Pedal

66-77	2 reqd, to idler lever	7526-1	1.75

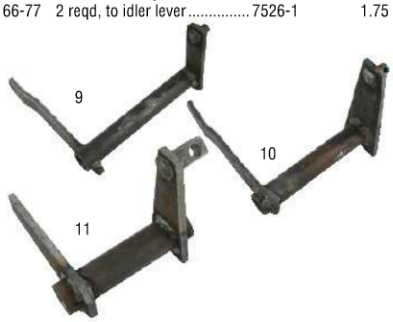

7528 BAR, Clutch Equalizer (aka "Z-bar" or "Bellcrank")

66-77	6 cyl., repro	F-7528-9	39.95
66-77	8 cyl., repro	F-7528-10	39.95
78-79	8 cyl., repro	F-7528-11	74.95



7A533 SEAL, Clutch Pedal Rod

66-77		7A533-2	5.95
78	(b4 ser#BA0,001)	F-7A533-5	18.95

7A535 PIVOT, Clutch Release Equalizer Engine Mounting

68-77	289, 302	F-7A535-1	14.95

7543 BALL, Equalizer Release Shaft

66-77	2 reqd	F-7543-2	9.95



7583 BUMPER, Clutch Pedal Arm

66-77		F-7583-2	10.00
80-89		F-7583-4	20.60



7561 RELEASE BEARING, Clutch

66-82	W/Diaphragm style clutch	F-7561-3	38.50
67-82	W/Long style clutch	F-7561-2	29.25
83-96	W/4sM/T	F-7561-4	30.50
88-96	W/5sM/T	F-7561-5	35.50



7562 SPRING, Clutch Release Anti-Rattle

66-77		7562-1	5.50

7600 PILOT BEARING, Crankshaft

66-67	289	7600-2	8.95
68-96	HD needle bearing style	F-7600-2	20.00

HYDRAULIC CLUTCH



7A512 HOSE ASSY., Clutch Hydraulic

84-86		F-7A512-2	39.67
87	300 (4.9l)	F-7A512-4	53.95
88-91	300 (4.9l) 302 (5.0l), 351W (5.8l), 5sM/T Mazda, excl T18 Warner 4sM/T	F-7A512-6	55.54
88-91	T18 Warner 4sM/T	F-7A512-7	66.65
92	5sM/T, Mazda, excl T18	F-7A512-8	76.17
93	4sM/T T18	F-7A512-10	43.35
93-96	5sM/T Mazda, excl T18	F-7A512-11	65.06



7A543 MASTER CYLINDER, Clutch Hydraulic

84-87	7/8" dia.	F-7A543-2	69.95
88-91	7/8" dia.	F-7A543-3	61.95
92	7/8" dia.	F-7A543-4	62.95
93-96	18mm dia.	F-7A543-5	62.50

7A564 SLAVE CYLINDER, Clutch Hydraulic

84-87	1" dia.	F-7A564-1	55.50
88-91	1" dia., w/T18 Warner 4sM/T	F-7A564-1	55.50
92-96	1 9/16" dia., excl 93-94 4sM/T T18 trans	F-7A564-4	67.95
93-94	21mm dia., w/4sM/T T18 trans	F-7A564-5	56.95

PRESSURE PLATES & DISCS

PREMIUM Clutch Sets by Ram

This is the clutch for your everyday driver. Each set contains the correct, top quality replacement parts. Use these sets for stock street driven vehicles with stock or near stock drivetrains. These premium sets contain all NEW components. Nothing rebuilt. No cores to return. Includes new premium material clutch disc and pressure plate, throwout bearing, pilot bearing and alignment tool.

POWERGRIP Clutch Sets by Ram

Ram Powergrip clutches are a heavy duty upgrade for street use. These sets feature composite organic, metallic and kevlar friction materials matched for the specific application to allow retention of OEM pressure plates where necessary and compatibility with OEM release systems. Each set includes OEM or better pressure plate, Powergrip disc, release bearing and alignment tool. Because the Powergrip disc provides increased holding power by using a higher coefficient of friction material, some chatter may occur under light loads. 2 year/24,000 mile mfgr warranty (proof of flywheel resurfacing required).

Always resurface the flywheel prior to the installation of a new or rebuilt clutch and always replace the pressure plate and clutch disc at the same time. Remember to replace the pilot bearing (7600), hydraulic slave cylinder (7A564) and throwout bearing (7561). Replacement flywheels can be found in engine section (6375).
10" x 1 3/8"-10 breaks down as 10" dia. disc, 1 3/8"center hub dia. with 10 splines.



RAM Clutch Table

Year	Application	Size	NEW Replacement Kit Part#	NEW Replacement Kit Price	Power-Grip Kit Part#	Power-Grip Kit Price
66-70	170, w/9" disc	9" x 1 1/16"-10	-		-	
66-74	170, 200, w/9 3/8" disc	9 3/8" x 1 1/16"-10	CALL		-	
80-82	4.9l	10" x 1 1/16"-10	7550-5DK	141.50	7550-5PG	406.95
80-82	4.9l	11" x 1 1/16"-10	F-7550-9A	164.50	F-7550-9B	428.95
83	4.9l, w/mech. linkage	11" x 1 1/16"-10	F-7550-10A	211.50	F-7550-10B	435.95
83	4.9l, w/hyd. linkage	10" x 1 1/16"-10	F-7550-3A	146.75	F-7550-3B	410.95
84-87	4.9l	10" x 1 1/16"-10	F-7550-3A	146.75	F-7550-3B	410.95
88-92	4.9l, 4sM/T	10" x 1 1/16"-10	F-7550-3A	146.75	F-7550-3B	410.95
88-92	4.9l, 5sM/T	10" x 1 1/16"-10	-		-	
88-92	4.9l, 4sM/T	11" x 1 1/16"-10	F-7550-5A	189.95	F-7550-5B	452.95
88-92	4.9l, 5sM/T	11" x 1 1/16"-10	F-7550-6A	198.95	F-7550-6B	459.95
66-76	289, 302	11" x 1 1/16"-10	F-7550-2A	171.75	7550-7PG	424.95
77-82	5.0l (302)	11" x 1 1/16"-10	F-7550-9A	164.50	F-7550-9B	428.95
83	5.0l (302)	11" x 1 1/16"-10	F-7550-10A	211.50	F-7550-10B	435.95
84-86	5.0l (302)	10" x 1 1/16"-10	F-7550-3A	146.75	F-7550-3B	410.95
87	5.0l (302)	11" x 1 1/16"-10	F-7550-5A	189.95	F-7550-11B	435.95
88-92	5.0l (302), 5sM/T	11" x 1 1/16"-10	F-7550-6A	198.95	F-7550-6B	459.95
88-92	5.0l (302), 4sM/T, w/ext. slave	11" x 1 1/16"-10	F-7550-5A	189.95	F-7550-5B	452.95
93-94	5.0l (302), w/ext. slave cyl	11" x 1 1/16"-10	F-7550-5A	189.95	F-7550-5B	452.95
93-96	5.0l (302), w/int. slave cyl	11" x 1 1/16"-10	F-7550-8A	269.50	F-7550-8B	504.95
78-80	5.8l (351)	11" x 1 1/16"-10	F-7550-12A	208.95	F-7550-12B	417.95
81-82	5.8l	11" x 1 1/16"-10	F-7550-9A	164.50	F-7550-9B	428.95
83	5.8l	11" x 1 1/16"-10	F-7550-10A	211.50	F-7550-10B	435.95
84-87	5.8l, verify disc size	10" x 1 1/16"-10	F-7550-3A	146.75	F-7550-3B	410.95
86-92	5.8l, 4sM/T, w/ext. slave	11" x 1 1/16"-10	F-7550-5A	189.95	F-7550-5B	452.95
88-92	5.8l, 5sM/T	11" x 1 1/16"-10	F-7550-6A	198.95	F-7550-6B	459.95
93-94	5.8l, (b4 2/94), w/int. slave cyl	11" x 1 1/16"-10	F-7550-8A	269.50	F-7550-8B	504.95
93-94	5.8l, w/ext. slave cyl	11" x 1 1/16"-10	F-7550-5A	189.95	F-7550-5B	452.95
94-96	5.8l, (from 2/94), w/int. slave	11" x 1 1/16"-10	F-7550-13A	402.95	F-7550-13B	552.95
78-79	6.6l (400)	12" x 1 1/16"-10	F-7550-14A	326.50	F-7550-14B	480.95
78-79	6.6l (400), ceramic option	12" x 1 1/16"-10	F-7550-14C	329.95	-	

Notes: •You must resurface your flywheel prior to the installation of any clutch and replace your Pilot bearing (7600). •Check flywheel for heat spots, warping or cracks, replace any questionable ones. •New flywheels, including SFI certified steel billet flywheels, can be found in engine section heading 6375. •It is advisable to use a thread locking compound on flywheel and pressure plate bolts then torque in proper sequence and to specs. DMF=dual mass flywheel.

CENTERFORCE CLUTCHES

The highest performance clutch on the market is now available from National Parts Depot! For those who want the best in their truck-this is it-period.

PRESSURE PLATE, Centerforce 1

30% greater holding power over stock clutch, must use with Centerforce disc and throwout bearing. Maintains a stock pedal feel. Recommended as the finest quality "upgrade" from the OE clutch.

PRESSURE PLATE, Centerforce 2

60% greater holding power over stock clutch, must use with Centerforce disc and throwout bearing. Recommended for use in mildly modified vehicles used for "Street/strip." Also proven capable in 4wd and off road use and in towing or commercial applications.

PRESSURE PLATE and DISC KIT, Centerforce Dual Friction

90% greater holding power over stock. Designed for High HP and torque applications.

THROWOUT BEARING, Centerforce

Required for all Centerforce clutches. Heavy Duty bearings that can absorb the same treatment as the clutches can. Most are permanently sealed.



CLUTCHES, CENTERFORCE

Year	Description	Centerforce I & II Disc	$	Centerforce I Plate	$	Centerforce II Plate	$	Dual Friction Set Disc & Plate	$	HD Throwout Bearing	$
80-82	4.9l, 10" x 1 1/16"-10	7550-10	114.50	F-7563-38	159.95	-		-		7561-10	39.75
80-82	4.9l, 11" x 1 1/16"-10	F-7550-33	115.95	F-7563-33	179.95	F-7563-33A	227.95	F-7563-33B	418.95	7561-10	39.75
83	4.9l, 11" x 1 1/16"-10	F-7550-33	115.95	F-7563-33	179.95	F-7563-33A	227.95	F-7563-33B	418.95	F-7561-4	30.50
84-87	4.9l, 10" x 1 1/16"-10	7550-10	114.50	7563-10	173.50	-		F-7563-30B	418.95	F-7561-4	30.50
87	4.9l, 4sM/T, HD, 11" x 1 1/16"-10	F-7550-33	115.95	F-7563-33	179.95	F-7563-33A	227.95	F-7563-33B	418.95	F-7561-4	30.50
88-92	4.9l, 10" x 1 1/16"-10	7550-10	114.50	7563-10	173.50	-		F-7563-30B	418.95	F-7561-4	30.50
88-92	4.9l, 5sM/T, HD, 11" x 1 1/16"-10	F-7550-33	115.95	F-7563-33	179.95	F-7563-33A	227.95	F-7563-33B	418.95	F-7561-4	30.50
66-76	289, 302, 11" x 1 1/16"-10	7550-11	115.95	7563-11	180.95	7563-11A	228.95	7563-11B	431.95	7561-10	39.75
77-79	302, 11" x 1 1/16"-10	F-7550-33	115.95	F-7563-33	179.95	F-7563-33A	227.95	F-7563-33B	418.95	7561-10	39.75
80-82	5.0l, 10" x 1 1/16"-10	7550-10	114.50	F-7563-38	159.95	-		-		7561-10	39.75
80-82	5.0l, 11" x 1 1/16"-10	F-7550-33	115.95	F-7563-33	179.95	F-7563-33A	227.95	F-7563-33B	418.95	F-7561-4	30.50
83	5.0l, 11" x 1 1/16"-10, F350 only	F-7550-33	115.95	F-7563-33	179.95	F-7563-33A	227.95	F-7563-33B	418.95	F-7561-4	30.50
83-85	5.0l, 10" x 1 1/16"-10, F150-250 only	7550-10	114.50	7563-10	173.50	-		F-7563-30B	418.95	F-7561-4	30.50
86	5.0l, 11" x 1 1/16"-10	F-7550-33	115.95	F-7563-33	179.95	F-7563-33A	227.95	F-7563-33B	418.95	F-7561-4	30.50
87	5.0l, 11" x 1 1/16"-10	F-7550-33	115.95	F-7563-33	179.95	F-7563-33A	227.95	F-7563-33B	418.95	F-7561-4	30.50
88-92	5.0l, 4sM/T, 11" x 1 1/16"-10	F-7550-33	115.95	F-7563-33	179.95	F-7563-33A	227.95	F-7563-33B	418.95	F-7561-4	30.50
88-92	5.0l, 5sM/T, 11" x 1 1/16"-10	F-7550-33	115.95	F-7563-33	179.95	F-7563-33A	227.95	F-7563-33B	418.95	F-7561-5	35.50
93-96	5.0l, 5sM/T, 11" x 1 1/16"-10	F-7550-33	115.95	F-7563-33	179.95	F-7563-33A	227.95	F-7563-33B	418.95	F-7561-11	41.50
78-80	5.8l, 11" x 1 1/16"-10	F-7550-33	115.95	F-7563-35	201.95	F-7563-35A	248.95	F-7563-35B	377.95	7561-10	39.75
81-82	5.8l, 11" x 1 1/16"-10	F-7550-33	115.95	F-7563-33	179.95	F-7563-33A	227.95	F-7563-33B	418.95	7561-10	39.75
83	5.8l, 11" x 1 1/16"-10	F-7550-33	115.95	F-7563-33	179.95	F-7563-33A	227.95	F-7563-33B	418.95	F-7561-4	30.50
83-85	5.8l, 10" x 1 1/16"-10	7550-10	114.50	7563-10	173.50	-		F-7563-30B	418.95	F-7561-4	30.50
86-87	5.8l, 11" x 1 1/16"-10	F-7550-33	115.95	F-7563-33	179.95	F-7563-33A	227.95	F-7563-33B	418.95	F-7561-4	30.50
88-92	5.8l, 4sM/T, 11" x 1 1/16"-10	F-7550-33	115.95	F-7563-33	179.95	F-7563-33A	227.95	F-7563-33B	418.95	F-7561-4	30.50
88-92	5.8l, 5sM/T, 11" x 1 1/16"-10	F-7550-33	115.95	F-7563-33	179.95	F-7563-33A	227.95	F-7563-33B	418.95	F-7561-5	35.50
93-94	5.8l, 11" x 1 1/16"-10	F-7550-33	115.95	F-7563-33	179.95	F-7563-33A	227.95	F-7563-33B	418.95	F-7561-11	41.50
95-96	5.8l, 11.5" x 1 1/16"-10	F-7550-40	225.95	F-7563-40	226.95	-		-		F-7561-11	41.50
78-79	6.6l (400), 12" x 1 1/16"-10	F-7550-34	154.50	F-7563-34	212.95	F-7563-34A	259.95	F-7563-34B	432.95	7561-10	39.75



7563 BOLT KIT, Clutch Mounting

A-4135H alloy steel, heat treated and magnafluxed. Bolts and lock washers incl.

80-89 W/Long style clutch, 5/16" x 3/4" 7563-1AK 5.95



Clutch Alignment Tool

Use to quickly align the clutch disc inside the pressure plate to the pilot bearing before the pressure plate is torqued down. This will allow the transmission to slide in easier and with fewer hassles.

1 1/16" dia. x 10 splines 912-1 3.95
1 3/8" dia. x 10 splines 912-2 6.95



PLUG, Trans Output Shaft

Prevent fluid loss all over your garage, driveway and/or yourself during transmission or driveshaft removal. Don't trust that old sandwich bag and kite string! Do it the way professionals do with these handy plastic plugs that are sized to fit snug within the seal and around the output shaft to make your maintanence tasks clean and easy!

1.44" O.D., C4, FMX, SB Ford 4sM/T & BW 902-1 4.50
1.7" O.D., C6 ..... 902-2 4.50
PLUG SET-Includes 5 plugs to fit 1" to 2.180" O.D. output shafts 902-4 12.95



DRIVESHAFT/SPEEDO/HUB/AXLE SECTION INFORMATION

Driveshaft.....pg 78
Front hub.....pg 79
Front axle shaft.....pg 81
Differential.....pg 82
Speedometer pg 78
Axle identification pg 80
Rear axle shaft pg 81

Some abbreviations found in this section (alphabetical-read across):

A/T Automatic transmission	chrg	charge (core charge)
ctrl..control (speed control)	dia.	diameter
DPC .... Dual piston caliper	DRW	Dual rear wheels
excl.....excluding	FA	Front axle
GVW.. Gross vehicle weight	HD	Heavy duty
incl..... includes	l	litre (metric engine size)
LB ..... Long bed	LH	drivers side
MB..... manual brakes	MC	Master cylinder
mm.....millimeter	M/T	Manual transmission
MV.....Hydro-boost	OE	Original equipment style
PB .....Power brakes	pc (s)	Piece (s)
RA.....Rear axle	Repl'mt	Replacement
reqd ..... Required	reqs	Requires
RH.....passenger side	SB	Short bed
ser# ..... serial number	SPC	Single piston caliper
SRW.....Single rear wheel	w/	Used with
W/o.....Used without	WB	Wheel base

 # pounds-when used following a number (8500#= 8500 pounds)

A complete listing of abbreviations may be found at the rear of this catalog.

DRIVESHAFT



4529 U-BOLT, Universal Joint

Unless noted otherwise 2 pieces are required per truck.

66-79 W/1 1/16" U-joint cap, 4 reqd T-4529-1 12.08
78-96 W/1 1/8" U-joint cap F-4529-3 1.94
80-96 W/1 1/16" U-joint cap T-4529-1 12.08

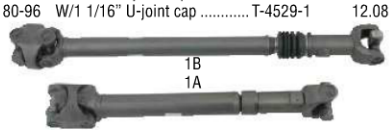

4605 DRIVESHAFT, Rebuilt

Note core charge on each item. See information page for more information in regards to core returns and requirements. Rebuilt driveshafts are disassembled, cleaned, reassembled with new U-joints and welded. They are then straightened to within .005" TIR and dynamcally balanced to within 1 oz/in for each 10 pounds of driveshaft weight.

66-70 Front, core chrg $140 ..... F-4605-1A 219.95
66-70 Rear, core chrg $140..... F-4605-1B 274.95
71-73 Front, core chrg $140 ..... F-4605-2A 219.95
71-73 Rear, core chrg $140..... F-4605-1B 274.95
74-77 Front, core chrg $140 ..... F-4605-2A 219.95
74-77 Rear, 302, core chrg $140..... F-4605-1B 274.95



4782 YOKE, Driveshaft Centering

79-96 Use w/double cardan shafts, 1 reqd F-4782-2 100.00

4635 U-Joint Table

Down arrows "▼" reference the next section listing below where 2 or more options exist for the section. Used especially for CV joints and link yoke joints.

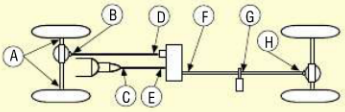

Year	Make and Model	A	B	C	D	E	F	G	H
1966-70	All, b4 70 ser#G70,001	F-3249-1	F-4635-12		▼		▼		F-4635-12
	CV joints, 2 reqd per location				F-4635-12		F-4635-18		
1970	From 70 ser#G70,001	F-3249-1	4635-4		▼		▼		4635-4
1971-77	All	▼	4635-4		▼		▼		4635-4
1971-72	Early 72, front axle wheel joint	F-3249-1							
1972-77	Late 72, front axle wheel joint	F-3249-2							
1978	351	F-3249-2	4635-4		▼		▼		4635-4
1978	400, excl 3.00 RA ratio	F-3249-2	4635-4		▼		▼		4635-4
1978	400, w/3.00 RA ratio	F-3249-2	4635-8		▼		▼		4635-8
	CV joints, 2 reqd per location				4635-4		4635-4		
	CV centering socket link yoke, 1 reqd per location				F-4635-9		F-4635-9		
1979	351, 400, C6 A/T w/part time 4wd	F-3249-2	F-4635-9		▼		▼		F-4635-9
1979	351, 400, 4sM/T, w/part time 4wd	F-3249-2	4635-8		▼		▼		F-4635-9
1979	351, 400 w/full time 4wd	F-3249-2	4635-8		▼		▼		F-4635-9
	CV joints, 2 reqd per location				4635-8		4635-8		
	CV centering socket link yoke, 1 reqd per location						F-4635-12		
1980-81	(b4 81 ser#GJ0,001)	F-3249-2	4635-8		F-4635-9		▼		4635-8
1981	(from 81 ser#GJ0,001)	F-3249-2	F-4635-9		4635-8		▼		F-4635-9
1982	All	F-3249-2	F-4635-9		F-4635-9		▼		F-4635-9
	CV joints, 2 reqd per location						4635-8		
	CV centering socket link yoke, 1 reqd per location						F-4635-12		
1983-85	All	F-3249-2	F-4635-9		F-4635-9		F-4635-9		F-4635-9
	CV centering socket link yoke, 1 reqd per location						F-4635-12		
1986	All	F-3249-2	4635-8		F-4635-9		4635-8	4635-8	F-4635-9
1987	All, w/one piece driveshaft	F-3249-2	4635-8		F-4635-9		4635-8		F-4635-9
1987	All, w/two piece driveshaft	F-3249-2	4635-8		F-4635-9		4635-8	4635-8	F-4635-9
1988	All, 3 reqd of A	F-3249-2	F-4635-9		F-4635-9		4635-8		F-4635-9
1989	All, 3 reqd of .A	F-3249-2	F-4635-9		F-4635-9		F-4635-2		F-4635-9
1990-96	Excl 5.0l w/4sM/T, 3 reqd at A	F-3249-2	F-4635-9		F-4635-9		4635-8	4635-8	4635-8
	W/5.0l & 4sM/T, 3 reqd at A	F-3249-2	F-4635-9		F-4635-9		4635-4		4635-4



4635 U-JOINTS, Driveshaft and CV

See charts on the following pages for U-Joint applications.

Standard	Price	Heavy Duty	Price
F-3249-1	use F-3249-1HD	F-3249-1HD	18.50
F-3249-2	use F-3249-2HD	F-3249-2HD	18.75
4635-4	10.25	F-4635-4HD	15.50
4635-8	12.95	F-4635-1HD	17.25
F-4635-9	58.95	F-4635-2HD	17.50
F-4635-12	62.50		
F-4635-18	23.95		

Heavy duty U-Joints have solid forged bodies and are made from special chrome-nickel alloy steel, heat treated for maximum hardness. Bearings are protected with lubed for life caps that contain synthetic lithium grease for less friction and greater temperature resistance. Excellent choice for increased horsepower, torque or off-road use! Same applications as those part numbers to the left of the "HD" suffix part numbers.

SPEEDOMETER

9D843 AMPLIFIER, Cruise Control, Replacement

NEW! 90-92 4.9l, ID# F59F-AA..... F-9D843-2A CALL

9C735 SERVO, Cruise Control, Rebuilt

NEW! 78-79 ID# D4SA-AB, core chrg $80 . F-9C735-1B CALL
NEW! 80-82 5.8l, 6.6l, ID# D4SA-AB, core chrg $80 ..... F-9C735-1B CALL

9C735 SERVO, Cruise Control, Replacement

NEW! 81 8 cyl., w/ Calif. emissions, ID# E2EF-AA,AB, E6EF-AB F-9C735-3A 93.50
NEW! 90-91 4.9l, ID# F0TF-AA..... F-9C735-5A CALL
NEW! 90-91 5.0l, E4OD, M/T, ID# F0TF-AA F-9C735-5A CALL
NEW! 90-92 5.0l, 5.8l, dealer installed speed control, ID# F0TF-AA ..... F-9C735-5A CALL

17303 GASKET, Speedometer Head

78-86 At instrument backing plate ... F-17303-1 5.00

We ran across this Ford formula for figuring the approximate number of teeth required for the driven gear (17271) to give proper speedo readings.

Driven gear teeth=

$$\frac{(\text{\# of drive gear teeth}) \times (\text{Axle ratio}) \times (\text{Tire revolutions per mile})}{1000}$$

Just plug in the number of teeth on the drive gear inside the transmission (6, 7, 8) multiplied by the axle ratio (3.00, 3.50, etc.) and multiplied the tire rev's per mile, then divide all that by 1000. The result, such as 19.27 is the approximate number of driven gear teeth required for proper speedo readings.

This formula is provided as a guide for customer use. Please do not ask your saleperson to do the work for you!



17260 CABLE ASSY., Speedometer

Originals or OE style reproductions.

66-77	70.81"	F-17260-6	23.95
87-89	W/o speed control, 80"	F-17260-20	80.92

Replacement style.

66-77	Repro, correct 71" length	F-17260-30A	31.95
73-77	(from 6/73), 3sM/T, w/o cruise ctrl	F-17260-30	17.50
73-77	(from 6/73), A/T, w/o cruise ctrl	F-17260-30	17.50
80	A/T, w/cruise ctrl, upper	F-17260-39	13.25
80	A/T, w/cruise ctrl, w/o ratio adapter, lower	F-17260-31	23.50
80-83	4sM/T, w/cruise ctrl, upper	F-17260-39	13.25
80-85	4sM/T, w/cruise ctrl, w/o ratio adapter, lower	F-17260-31	23.50
80-86	4sM/T, w/cruise ctrl, w/o ratio adapter, lower	F-17260-33	15.50
80-86	A/T, w/cruise ctrl, w/o ratio adapter, lower	F-17260-33	15.50
81-85	A/T, w/cruise ctrl, lower	F-17260-31	23.50
81-85	A/T, w/cruise ctrl, upper	F-17260-39	13.25
84	A/T, 4sM/T, w/o cruise ctrl	F-17260-34	24.50
84-85	4sM/T, w/cruise ctrl	F-17260-44	23.50
85-86	4sM/T, w/o cruise ctrl	F-17260-34	24.50
85-88	5sM/T, w/o cruise ctrl	F-17260-32	25.25
86-88	A/T, w/cruise ctrl	F-17260-38	23.50
86-91	4sM/T, w/cruise ctrl	F-17260-38	23.50
87	A/T	F-17260-34	24.50
87	W/o cruise ctrl	F-17260-45	23.50
87-91	M/T, w/o cruise ctrl, excl OD trans.	F-17260-35	22.50
87-91	M/T, w/cruise ctrl, excl OD	F-17260-38	23.50
89-91	A/T, w/o cruise ctrl	F-17260-35	22.50
92-94	W/cruise ctrl	F-17260-38	23.50



17264 CLIP, Speedometer Cable

66-96	To trans housing	17264-1	9.95

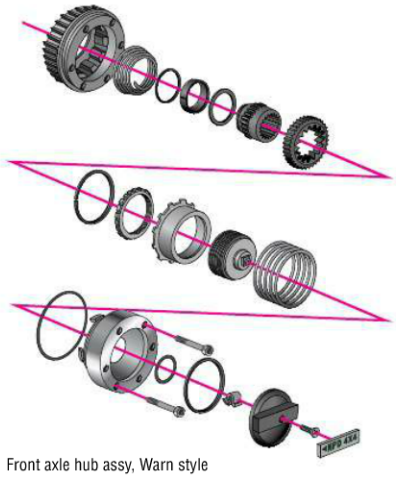

Front axle hub assy, Warn style



17292 CLIP, Speedometer Gear

66-96	To cable end	17292-1	0.90

17298 O-RING, Speedo Cable

66-94	Not included with cables	17298-1	0.95

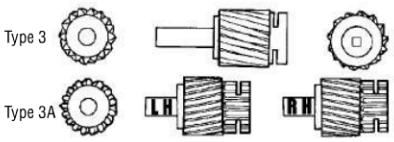

Notice the different rotations of the gears

17271 GEAR, Speedometer, Driven

Attaches to speedometer cable end. See 17264 for attaching clip

T 3	Blue, 16 tooth, RH rotation	17271-2	1.94
T 3	Clear or green, 17 tooth, RH	17271-4	2.67
T 3	Tan, 18 tooth, RH	17271-5	2.00
T 3	Tan, 19 tooth, RH	17271-6	2.60
T 3	Orange, 20 tooth, RH	17271-7	3.27
T 3	Purple, 21 tooth, RH	17271-8	2.00

Type 3A

Add suffix in chart to base number 17271-__

OE color	Teeth #	Orig.	Price	Repro	Price
RH rotation:					
Brown/wine	15	9	3.04	-	-
	16	-	-	19A	6.25
Green/white	17	10	3.07	10A	6.25
Yellow	18	13	4.00	13A	6.25
All pink	19	15	3.07	15A	6.25
Black	20	16	3.07	16A	6.25
Red	21	18	2.87	18A	6.25
LH rotation:					
Brown/orange	16	1	9.33	1A	6.25
Purple	17	11	7.73	11A	6.25
	18	-	-	13A	6.25
Pink end	19	14	4.00	14A	6.25
Blue	20	-	-	17A	6.25
	21	-	-	21A	6.25

RH rotation is typically used in 4sM/T's and LH rotation used in all others. Transmissions with the speedo cable hole on the drivers side typically use RH rotation gears as marked above, Trans with Passenger side holes typically used LH rotation gears. Repros are all molded in black. Gear rotation has nothing to do with the type code (3, 3A)

FRONT HUB



1A029 KNOB, Lockout Hub Actuating

66-77		F-1A029-1	10.00
80-89		F-1A029-2	12.00



F-1K104-1 (3.25" O.D.) F-1K104-2

1K104 CAP ASSY, Front Locking Hub, Original Ford

80-96	W/manual locking hubs, Dana 44 FA, 3.25" O.D.	F-1K104-1	99.95
80-96	W/automatic locking hubs	F-1K104-2	109.55

F-1104-1C F-1104-2C



•Warn standard manual hubs offer manual locking and unlocking of hubs when shifting in or out of four-wheel drive easily. Same quality as original equipment hubs. Feature weight saving components and chrome plated or satin finish aluminum housings. Install in less than one hour. Limited lifetime warranty from Warn Industries.

•Warn premium manual hubs upgrade from standard grade with brass style control dial known by four wheelers throughout the world-this is Warns best hub! Corrosion resistant finish. Limited lifetime warranty from Warn Industries.

WARN FRONT HUB APPLICATION CHART

Year	Foot Notes	Spline Count	Standard Manual Set	Premium Manual Set
66-80	A	19	F-1104-1C	F-1104-2C
81-96	B	19	F-1104-1C	F-1104-2C

F-1104-1C..... $89.95 F-1104-2C..... $159.95

Foot note: [A] Hubs are not compatible with full time four wheel drive unless used in conjunction with a transfer case conversion kit.
[B] Automatic hubs can NOT be installed on axles with limited slip, posi-traction or any other type of closed differential.

Service kit for F-1104-1C model M248 hubs	F-1K106-1K	32.95
Service kit for F-1104-2C model M198D hubs	F-1K106-1K	32.95
Service kit for F-1104-3C model M256 hubs	F-1K106-1K	32.95
Service kit for F-1104-4C model M197A and -8C model M229 hubs	F-1K106-1K	32.95

F-1K106-1

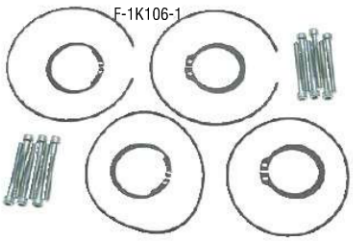

1K106 REPAIR KIT, Front Locking Hub

80-92	W/automatic locking hubs	F-1K106-2	102.16
80-92	W/manual locking hubs	F-1K106-1	28.22

Axle Identification Codes

This catalog frequently references "gross axle weight rating" (GAWR) and "gross vehicle weight rating" (GVW or GVWR). These ratings are listed on the warranty ID plate located on the driver's door jamb. GVW ratings are listed in their own space on this tag. GAWR ratings in this catalog are often listed as 3500# FA, for example, other times it my show 3000# GAWR FA (meaning 3500 pound GAWR front axle), FA stands for front axle while RA stands for rear axle. The GAWR axle ratings are listed on late model truck ID tag but the axle codes must be deciphered on earlier trucks to clarify the actual weight rating. The list below should help in that task. Not all applications may be listed. The Ford information from which this information is derived has been known to omit some information. Along the same lines some codes have overlapping applications. In these instances other identifcation means may be necessary.

Reading the ID plate on the driver's door under "Axle", the first two digits reference the rear axle codes, the third digit refers to the front axle code. Descriptions list the year, axle ratio, axle model, weight rating and if it is a locking or limited slip differential in that order (open differentials are not noted), then the ID code found on the ID plate. See ID plate images for code locations.

Bronco

1966-79	*Front axle*	*Code*
67	Dana 30, locking	2
68-70	Dana 30, ltd slip	J
71-72	Dana 44.1F	K
78	W/P/S	A
78-79	Roll bar, w/P/S	B
78-79	3850#, roll bar, w/P/S	C
78-79	4500#, roll bar, w/P/S	D
77	3800#, w/P/S	E
78-79	3850#, w/P/S	E
77	W/P/S	G
77	W/P/S	H
78-79	4500#, w/P/S	I
77-78	W/P/S	J
78-79	Roll bar w/P/S	K
78-79	3850#, roll bar, w/P/S	L
78-79	4500#, roll bar, w/P/S	M
78-79	3850#, w/P/S	N
73-76	Dana 44F, w/P/S, locking	Q
78-79	4500#, w/P/S	R
79	Roll bar w/P/S	S
79	3850#, roll bar w/P/S	T
79	4500#, roll bar w/P/S	U
79	3850#, w/P/S	V
79	4500#, w/P/S	Z
78-79	Roll bar w/P/S	2
78-79	3850#, roll bar w/o P/S	3
78-79	4500#, roll bar w/o P/S	4
77-79	3800#, w/o P/S	5
77	W/o P/S	7
73-76	Dana 44F, w/o P/S, locking	8
77	W/o P/S	8
78-79	4500#, w/o P/S	9

1966-79	*Rear axle*	*Code*
66-72	4.11 Ford 2780# locking	A3
66-78	4.57 Ford 2780# locking	A4
66-72	4.11 Ford 3300# locking	A5
66-67	4.57 Ford 3300# locking	A6
67-72	3.50 Ford 2780# locking	B8
67-72	3.50 Ford 3300# locking	B9
66-72	4.11 Ford 2780#	03
66-72	4.57 Ford 2780#	04
66-72	4.11 Ford 3300#	05
66-68	4.57 Ford 3300#	06
69-72	3.50 Ford 3300# locking	08
67-72	3.50 Ford 2780#	18
67-68	3.50 Ford 3300#	19
73-75	4.11 Ford 2780#, locking	A3
76-77	4.11 Ford 2900#	A3
73-76	4.11 Ford 3300#, locking	A5
73-75	3.50 Ford 2780#, locking	B8
76	4.11 Ford 2900#, locking	B8
77	3.50 Ford 2900#	B8
73-76	3.50 Ford 3300#, locking	B9
77-79	3.50 Ford 3750#	H2
79	2.75 Ford 3750#	H3
78-79	3.25 Ford 3750#	H4
77-79	4.11 Ford 3750#	H9
77	3.00 Ford 3300#, locking	02
73-75	4.11 Ford 2780#	03
76-77	4.11 Ford 2900#, locking	03
77-79	2.75 Ford 2900#, locking	06
77	3.25 Ford 2900#, locking	07
77	3.50 Ford 3300#, locking	08
77	2.75 Ford 3300#, locking	11
77-78	3.00 Ford 2900#, locking	12
79	4.11 Ford 3750#, locking	12
77-79	2.75 Ford 3750#, locking	13
77-79	3.00 Ford 3750#, locking	14
77-79	3.25 Ford 3750#, locking	15
77-79	3.50 Ford 3750#, locking	16
77	3.25 Ford 3300#, locking	17
73-75	3.50 Ford 2780#	18
76-77	3.50 Ford 2900#, locking	18
77	4.11 Ford 3750#, locking	19

1980-89	*Front Axle*	*Code*
80-89	Ltd slip	2
83-89	W/o P/S	3
83-89	W/o PB	4
83	W/PB	5

1980-89	*Rear Axle*	*Code*
80-81	2.75 Ford 2800#, ltd slip	A1
83	2.75 Ford 2800#	A1
81	3.00 Ford 2800#, ltd slip	A2
85-89	4.10 Ford 2770#, 2790#, locking	A2
88-89	3.45 Ford 2770#, 2790#, locking	A3
81	3.25 Ford 2800#, ltd slip	A4
85-89	3.73 Ford 2770#, 2790#, locking	A4
81	2.47 Ford 2800#, ltd slip	A7
89	4.10 Ford 2770#, 2950#, locking	B1
85-89	4.10 Ford 2500#, 2640#, ltd slip	D7
80	3.50 Ford 3750#, ltd slip	H2
80-82	2.75 Ford 3750#, ltd slip	H3
85-86	4.11 Ford 3750#, locking	H3
80	3.25 Ford 3750#, ltd slip	H4
81-86	3.00 Ford 3750#, ltd slip	H4
81-82	3.25 Ford 3750#, ltd slip	H5
83	2.73 Ford 3750#, ltd slip	H5
87-89	4.10 Ford 3800#	H5
81-87	3.50 Ford 3750#, ltd slip	H6
80	3.00 Ford 3750#, ltd slip	H7
81-82	2.47 Ford 3750#, ltd slip	H7
83-86	3.08 Ford 3750#, ltd slip	H8
87-89	3.08 Ford 3800#, ltd slip	H8
83-89	3.55 Ford 3750#, ltd slip	H9
87-89	3.55 Ford 3800#	H9
84-86	3.73 Ford 3200#, locking	K6
80-82	2.75 Ford 2800#	01
80-82	3.00 Ford 2800#	02
81-82	3.25 Ford 2800#	04
81-82	2.47 Ford 2800#	07
87-89	2.73 Ford 3750#, 3800#	12
80-82	2.75 Ford 3750#	13
85-86	4.11 Ford 3750#	13
80-87	3.00 Ford 3750#	14
80-82	3.25 Ford 3750#	15
83	2.73 Ford 3750#	15
80-87	3.50 Ford 3750#	16
81-86	2.47 Ford 3750#	17
83-89	3.08 Ford 3750#	18
87-89	3.08 Ford 3800#, locking	18
83-89	3.55 Ford 3750#	19
87-89	3.55 Ford 3800#, locking	19
83	3.75 Dana 3750#, ltd slip	22
83-87	3.55 Ford 3750#	26
88-89	3.45 Dana 2770#, 2790#	33
87-89	3.73 Ford 2770#, 2790#	34



1966-69, 70-72 similar

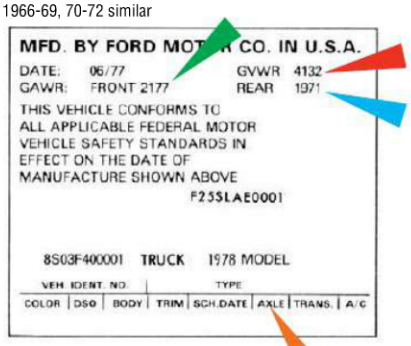

1978, 73-77 similar

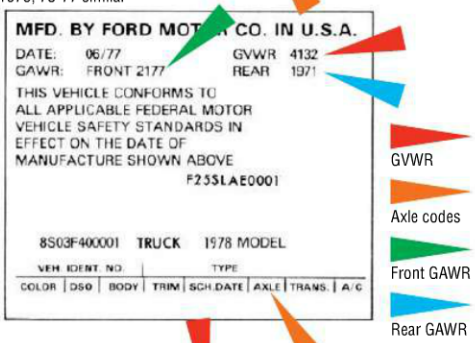

1980-86, 79, 90-96 similar

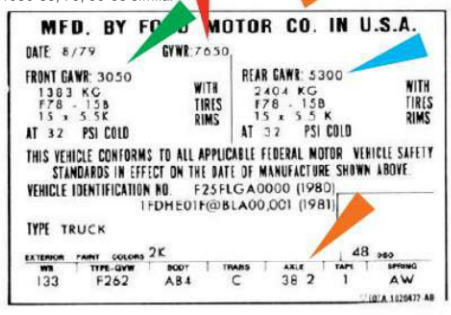

Order toll free 24 hrs a day, 7 days a week!

Michigan Depot local 734-397-4569, tollfree 800-521-6104

FRONT AXLE SHAFT

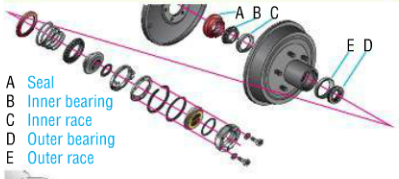

A Seal
B Inner bearing
C Inner race
D Outer bearing
E Outer race

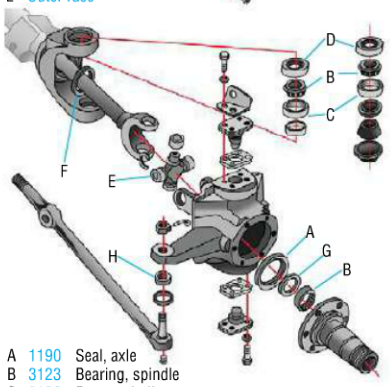

A 1190 Seal, axle
B 3123 Bearing, spindle
C 3126 Race, spindle
D 3171 Seal, bearing
E 3249 U-Joint
F 3254 Seal, axle shaft
G 3299 Spacer, axle bearing
H 3332 Seal, tie rod

Items in blue-check listings for applications.



1190, 1201, 1202, 1216, 1217 SEALS/BEARINGS/RACES, Front Axle

This list combines the grease seals, inner and outer bearings and races into one listing. We strongly recommend that bearings and races be replaced together as using new bearings into old races may cause bearing failure. A bearing assembly is either an integral roller unit or is a bearing and race in a matched set. Roller bearings include retainer.

66-69	(b4 69 ser#F30,001), Dana 30AF FA		
	seal	F-1190-7	8.85
	inner bearing	4221-2	11.75
	inner race	4222-2	7.50
	outer bearing	4221-1	11.55
	outer race	4222-1	4.95
69-71	(from 69 ser#F30,001), Dana 30AF FA		
	seal	F-1175-5	6.20
	inner bearing	4221-2	11.75
	inner race	4222-2	7.50
	outer bearing	4221-1	11.55
	outer race	4222-1	4.95
71-86	Dana 44.1F FA		
	seal	F-1175-5	6.20
	inner bearing	4221-2	11.75
	inner race	4222-2	7.50
	outer bearing	4221-1	11.55
	outer race	4222-1	4.95
87-88	(b4 3/88), manual locking FA hubs		
	seal	F-1190-11	9.40
	inner bearing	F-1201-6	11.95
	inner race	F-1202-5	6.65
	outer bearing	F-1201-6	11.95
	outer race	F-1202-5	6.65
87-88	(b4 3/88), automatic locking FA hubs		
	seal	F-1175-5	6.20
	inner bearing	4221-2	11.75
	inner race	4222-2	7.50
	outer bearing	4221-1	11.55
	outer race	4222-1	4.95
87-88	(from 3/88 to b4 5/88), manual locking FA hubs, w/ limited slip		
	seal	F-1190-11	9.40
	inner bearing	4221-2	11.75
	inner race	4222-2	7.50
	outer bearing	4221-1	11.55
	outer race	4222-1	4.95
87-88	(from 3/88 to b4 5/88), manual locking FA hubs, w/o limited slip		
	seal	F-1190-11	9.40
	inner bearing	F-1201-6	11.95
	inner race	F-1202-5	6.65
	outer bearing	4221-1	11.55
	outer race	4222-1	4.95
88-96	4x4, (from 5/88), FA		
	seal	F-1175-5	6.20
	inner bearing	4221-2	11.75
	inner race	4222-2	7.50
	outer bearing	4221-1	11.55
	outer race	4222-1	4.95
92-96	4x2		
	FA, seal	F-1190-5	6.60
	inner bearing	1201-4	6.95
	inner race	1202-4	4.05
	outer bearing	1216-4	5.95
	outer race	1217-4	3.50

REAR AXLE SHAFT

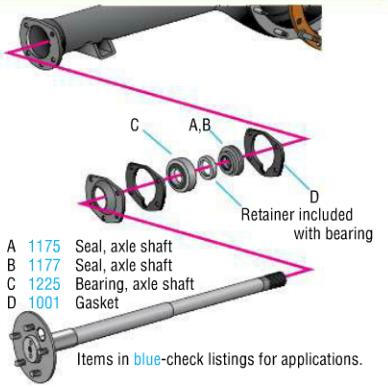

A 1175 Seal, axle shaft
B 1177 Seal, axle shaft
C 1225 Bearing, axle shaft
D 1001 Gasket

Items in blue-check listings for applications.



1001 GASKET, Rear Wheel Backing Plate

66-68	Ford 9" rear axle, axle retainer to brake backing plate, pair, 3.375" x 2.0" bolt pattern, aka "small Ford" flange	1001-1A	2.20
66-70	(before 70 serial# G50,001), 2700 lbs Ford 9" rear axle, brake backing plate to axle flange, pair, 3.375" x 2.0" bolt pattern, aka "small Ford" flange	1001-1B	2.20
66-70	(before 70 serial# G50,001), 3300 lbs Ford 9" rear axle, 3.5" x 2.375" bolt pattern, aka "big Ford" flange	F-1001-1	1.70
70-83	(from 70 serial# G50,001), 2700 lbs Ford 9" rear axle, 3.375" x 2.0" bolt pattern, aka "small Ford" flange	1001-4	3.65
70-83	(from 70 serial# G50,001), 3300 lbs Ford 9" rear axle, backing plate, 3.5" x 2.375" bolt pattern, aka "big Ford" flange	F-1001-2	2.90
83-96	Dana 44 rear axle	F-1001-4	5.25



1175/1177 SEAL, Rear Axle Grease

66-68	2780# RA	F-1175-12	9.15
66-77	3300# Ford RA	T-1177-2	5.60
69-78	2780, 2900# Ford 9" RA	F-1175-12	9.15
78-86	Ford 9" RA	F-1175-16	12.10
80-82	3750# Ford RA	F-1175-16	12.10
87-96	8.8" Ford RA	F-1175-17	3.50



1225, 1239, 1240, 1243, 1244 BEARINGS/RACES, Rear Axle

This list combines the inner and outer bearings and races into one listing. We strongly recommend that bearings and races be replaced together as using new bearings into old races may cause bearing failure. A bearing assembly is either an integral roller unit or is a bearing and race in a matched set. Roller bearings include retainer.

66-68	2780# Ford RA, bearing assy.	1225-2	22.30
66-77	3300# Ford RA, bearing assy.	T-1225-2	32.25
69-78	2780, 2900# Ford RA, bearing assy	1225-2	22.30
78-79	3300# Ford RA, bearing assy.	F-1225-4	37.25
80-82	3750# Ford RA, bearing assy.	F-1225-4	37.25
83-86	Ford 9" RA, bearing assy	F-1225-4	37.25
83-96	Ford 8.8" RA, bearing assy	F-1225-10	16.95



4234/5 AXLE SHAFT, New

Rolled splines for strength, incl bearing, seal, bolts and nuts, OE replacement

83-86	8.8" Ford RA, 31 spline, RH	F-4234-1A	311.95
83-86	8.8" Ford RA, 31 spline, LH	F-4235-1A	313.95
87-96	8.8" Ford RA, 31 spline, RH	F-4234-2A	269.95
87-96	8.8" Ford RA, 31 spline, LH	F-4235-2A	226.95



4N237 U-WASHER, Axle Shaft Retaining

1 retainer is required per axle shaft.

83-96	W/3750# Ford 8.8" RA	F-4N237-1	2.08

DIFFERENTIAL

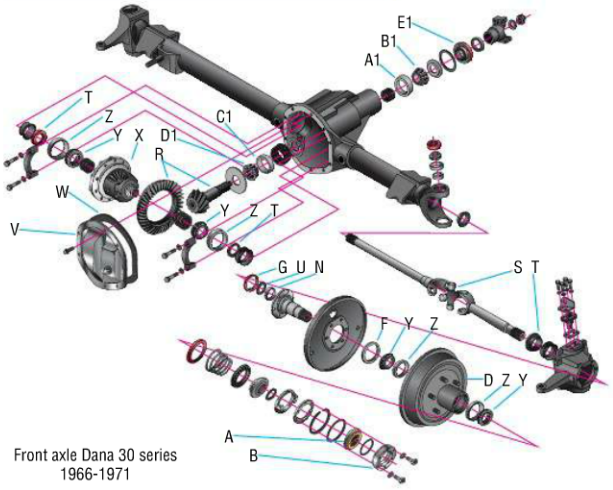

Front axle Dana 30 series
1966-1971

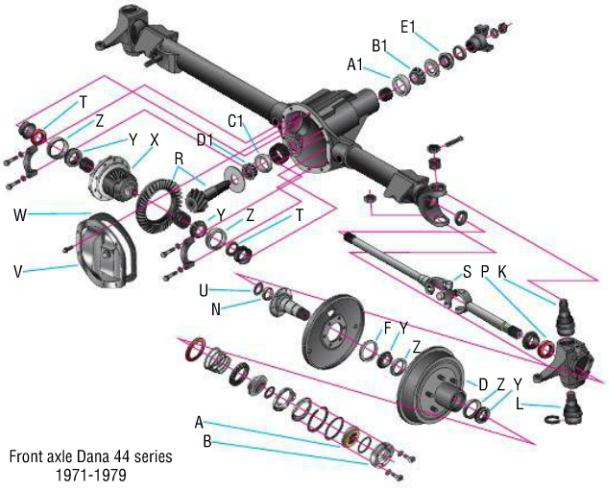

Front axle Dana 44 series
1971-1979

Rear axle illustrations legend

A	1177	Seal, wheel bearing inner	Q	4222	Race, differential bearing
B	1201	Bearing, axle	R	4236	Side gear, differential
C	1225	Bearing, wheel	S	4616	Race, axle pinion
D	1239	Race, wheel bearing	T	4621	Bearing, axle pinion
E	1240	Bearing, rear wheel outer or pinion	U	4625	Pilot bearing, axle pinion
F	1244	Bearing, rear wheel inner	V	4627	Retainer, axle pinion pilot bearing
G	4022	Vent, axle housing	W	4628	Race, axle pinion
H	4033	Cover, axle	X	4630	Bearing, axle pinion
J	4035	Gasket, axle cover	Y	4662	Spacer (crush sleeve), axle pinion
K	4036	Gasket, axle center section	Z	4676	Seal, axle pinion bearing
L	4204	Differential	A1	4880	Clutch kit, differential
M	4209	Gear, ring & pinion	B1	4945	Disc, locking differential
N	4211	Shaft, differential spider	C1	4947	Plate, locking differential
O	4215	Pinion gear, differential	D1	1175	Seal, rear wheel grease
P	4221	Bearing, differential	E1	4669	Seal, pinion bearing retainer

Items in blue-check listings for applications.

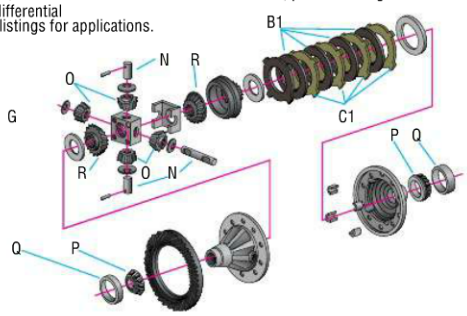

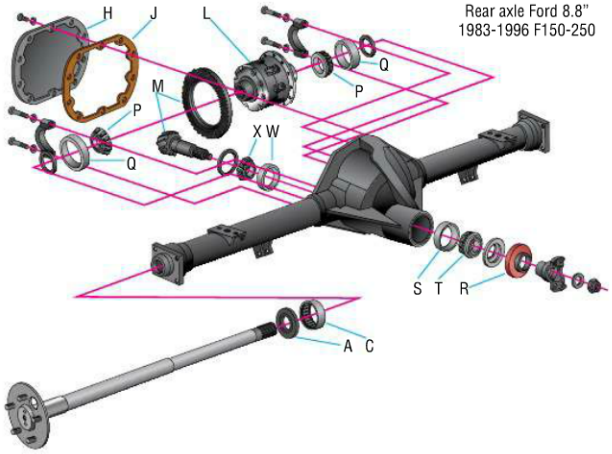

Rear axle Ford 8.8"
1983-1996 F150-250

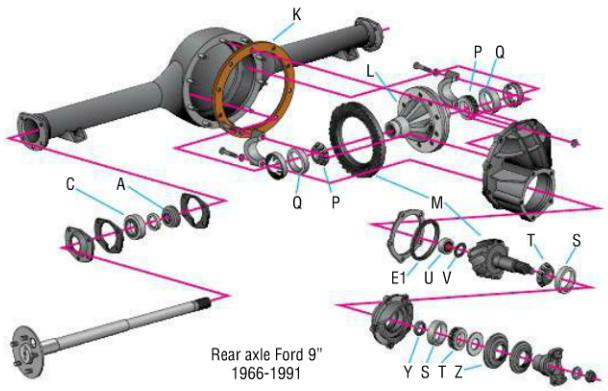

Rear axle Ford 9"
1966-1991



Rob Cavill

Order toll free 24 hrs a day, 7 days a week!

Michigan Depot local 734-397-4569, tollfree 800-521-6104

Front axle illustrations legend

A 1A029 Knob, hub lockout
B 1A050 Cover, front hub
C 1102 Rotor, front disc brake
D 1125 Drum, front brake
E 1131 Cap, grease
F 1175 Seal, grease
G 1190 Seal, front wheel grease
H 1201 Bearing, front
J 1202 Race, front
K 3049 Ball joint, upper
L 3050 Ball joint, lower
M 3110 Bushing, spindle
N 3123 Bearing, spindle bolt
O 3126 Race, spindle bearing
P 3132 Seal, spindle arm
Items in blue-check listings for applications.

Q 3171 Seal, spindle bearing
R 3222/4209 Gear, ring & pinion
S 3249 U-Joint
T 3254 Seal, axle shaft
U 3299 Spacer, axle bearing
V 4033 Cover, axle housing
W 4036 Gasket, axle cover
X 4204 Differential
Y 4221 Bearing, axle
Z 4222 Race, axle bearing
A1 4616 Race, pinion bearing
B1 4621 Bearing, axle pinion
C1 4628 Race, pinion bearing
D1 4630 Bearing, axle pinion
E1 4676 Seal, pinion bearing
F1 87922-S Grease fitting
G1 3B177 Bushing, axle pivot
H1 1244 Bearing, axle inner

Front axle- Dana 44 Independant front suspension
1980-1996 F150-350

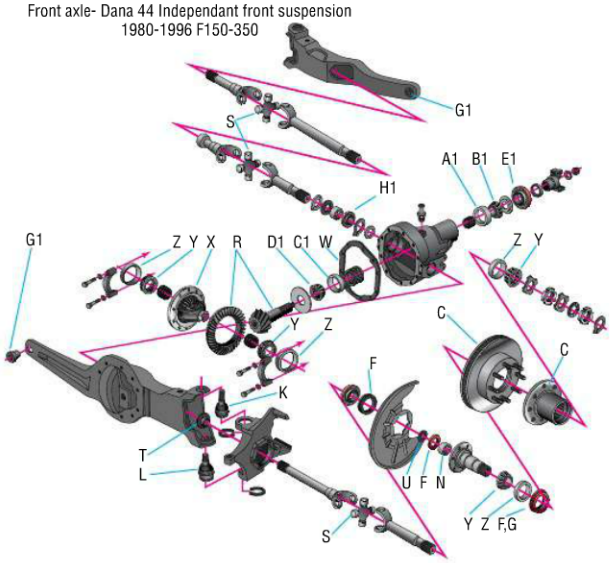

4033 COVER, Axle Housing

See group 4346 for attaching bolts.

FRONT AXLE



66-71 (b4 71 ser#K20,001), Dana 30 FA, chrome F-4033-8A 29.95
66-71 Dana 30 FA, finned aluminum F-4033-10A 122.95



71-79 Dana 44 FA, chrome kit w/gskt and bolts F-4033-11B 35.75
71-79 Dana 44 FA, finned aluminum F-4033-11A 156.50



REAR AXLE

83-96 Ford 8.8" RA, chrome F-4033-5A 19.95



4035 GASKET, Differential to Housing

66-91 Ford 9" 4035-2 5.25

4036 GASKET, Axle Cover to Housing

66-98 W/Dana 44, 10 bolt, 10 1/2" x 9 3/8" hexagon T-4036-1 3.50
83-98 W/Ford 8.8" RA, 10 bolt, 11 1/2" x 10 7/8" F-4036-4 7.85
66-71 W/Dana 30 FA, 10 bolt, 8 3/4" x 9 1/8" oval F-4036-5 5.95



F-4346-1A

4346 BOLT KIT, Axle Housing Cover

Kits include all necessary bolts and washers.

66-98 W/Dana 44, 5/16"-18 x 3/4", zinc F-4346-1 4.50
66-98 W/Dana 44, 5/16"-18 x 3/4", chrome F-4346-1A 10.75



19562 SEALANT, Axle Cover

80-96 Axle cover to housing..... F-19562-1 7.95



3222 RING & PINION SET, Front 4x4 IFS Axle

80-96 Dana 44 IFS, 3.54 ratio, original F-3222-5 319.95
80-96 Dana 44 IFS, 4.10 ratio, original F-3222-6 343.95

4209 RING & PINION SET, Axle

Dana 30, 4.10 ratio, front F-3222-1 281.95
Dana 30, 4.56 ratio, front F-3222-2 281.95
Dana 44, 4.10 ratio, front or rear axle F-4209-3 284.95
Dana 44, 4.56 ratio, front or rear axle F-4209-4 316.50
Ford 8.8", 3.27 ratio F-4209-17 283.95
Ford 8.8", 3.55 ratio F-4209-11 309.95
Ford 8.8", 3.73 ratio F-4209-12 309.95
Ford 8.8", 4.10 ratio F-4209-13 316.95
Ford 8.8", 4.30 ratio F-4209-14 341.95
Ford 8.8", 4.56 ratio F-4209-15 326.95
Ford 9", 3.50 ratio 4209-8 299.95
Ford 9", 3.89 ratio 4209-9 309.95
Ford 9", 4.11 ratio 4209-1 297.50
Ford 9", 4.56 ratio F-4209-10 308.95

389546 LOCK NUT, Axle Pinion

66-96 Most versions, 3/4"-20, 4851 flange to pinion 389546-S 1.60

6379 BOLT, Ring Gear To Differential

66-83 NEW! Ford 9" rear axle, ring gear to differential, 10 reqd, excl Equa-loc or Traction Loc diffs 6379-1 1.75



F-4204-8

4026/4204 AUBURN LOCKING DIFFERENTIAL

Auburn limited slip differentials feature cone type clutches for excellent performance and durability under severe duty environments. Excellent response on or off-road.

83-98 W/Ford 8.8" RA, 28 spline, "Auburn" style, Super Duty F-4204-8 635.95
83-98 W/Ford 8.8" RA, 31 spline, "Auburn" style, Super Duty F-4204-9 656.95
83-98 W/Dana 44A, 30 spline, using 3.73 or less axle ratio, "Auburn" style, Super Duty F-4204-10A 529.95
83-98 W/Dana 44A, 30 spline, using 3.92 or larger axle ratio, "Auburn" style, Super Duty F-4204-10B 529.95

19546 FRICTION MODIFIER ADDITIVE, Locking Axle

66-97 Required with all clutch type locking axles, excl Detroit Lockers, 4 oz. bottle ... F-19546-1 4.40

4221 BEARING, Axle Differential

FRONT AXLE:

66-71 (b4 71 ser#K20,001), w/Dana 30 FA 4221-1 11.55
71-75 (from 71 ser#K20,001), w/Dana 44 FA F-4221-3 15.30
80-96 W/Dana 44 FA, outer, includes race F-4221-4 26.20
80-96 W/Dana 44 FA, inner F-4221-3 15.30

REAR AXLE:

66-70 (b4 5/13/70), w/Ford 9" RA, excl axle codes "WEM-B1X, F1X, WEN-B1X, F1X..... 4221-1 11.55
67 W/Ford 9" RA, including only axle codes "WEM-B1X, F1X, WEN-B1X, F1X..... 4221-2 11.75
70-86 W/Ford 9" RA, including only axle codes "WDM, WFE" 4221-4 11.35
83-96 W/Ford 8.8" RA..... 4221-2 11.75

4222 BEARING RACE, Axle Differential

FRONT AXLE:

66-71 (b4 71 ser#K20,001), w/Dana 30 FA F-4222-8 5.75
71-79 (from 71 ser#K20,001), w/Dana 44 FA T-4222-1 10.50
80-96 W/Dana 44 FA, outer, includes bearing F-4221-4 26.20
80-96 W/Dana 44 FA, inner T-4222-1 10.50

REAR AXLE:

66-70 (b4 5/13/70), w/Ford 9" RA, excl axle code suffixes "-B1X, -F1X" 4222-1 4.95
67 W/Ford 9" RA, including only axle code suffixes "-B1X, -F1X" 4222-2 7.50
70-86 (from 5/13/70), w/Ford 9" RA 4222-4 5.55
83-96 W/Ford 8.8" RA..... F-4222-3 7.50

4614 *MOUNTING KIT, Pinion Support*

66-83 NEW! Ford 9" rear axle, concours, (5) 4614-1AK 8.00





4616/4628 BEARING RACE, Diff. Pinion Bearing

Pinion gears are supported by two bearings: a front and a rear, Do not confuse the "Front" and "Rear" labels to mean front axle (FA) or rear axle (RA).

FRONT AXLE:

66 (b4 ser#816,001), rear, w/Dana 30 FA F-4616-6 8.05
66-71 (b4 71 ser#K20,001), front, w/Dana 30 FA F-4616-6 8.05
66-96 (from 66 ser#816,001), rear, w/Dana 30, 44 FA T-4616-1 7.80
71-96 (from 71 ser#K20,001), front, w/Dana 44 FA T-4628-1 9.65

REAR AXLE:

66-84 Front or rear, w/Ford 9" RA, 2 reqd T-4616-2 5.75
83-96 Front, w/Ford 8.8" RA T-4616-2 5.75
83-96 Rear, w/Ford 8.8" RA..... F-4628-3 7.80

4621/4625/4630 BEARING, Diff. Pinion

Unless noted otherwise 1 bearing is required per application. Pinion gears are supported by two bearings: a front and a rear, Do not confuse the "Front" and "Rear" labels to mean front axle (FA) or rear axle (RA).

FRONT AXLE:

66-71 (b4 71 ser#K20,001), front, w/Dana 30 FA F-4621-7 17.75
66 (b4 ser#816,001), rear, w/Dana 30 FA F-4630-8 21.75
66-96 (from 66 ser#816,001), rear, w/Dana 30, 44 FA T-4621-1 18.25
71-96 (from 71 ser#K20,001), front, w/Dana 44 FA T-4630-1 22.50

REAR AXLE:

66-86 Front or rear, w/Ford 9" RA, 2 reqd 4621-1 11.55
66-86 Rear pilot, w/Ford 9" RA, codes: "WDM, WFE" T-4625-1 31.75
83-96 Rear, w/Ford 8.8" RA..... F-4630-3 15.80

4627 BEARING RETAINER, Rear Diff. Pinion Pilot

66-86 W/Ford 9" RA..... T-4627-1 3.37



4635 U-JOINT, Drivetrain

See U-joint tables in Driveshaft section.

4662 BEARING SPACER, Rear Diff. Pinion

66-86 W/Ford 9" RA, excl axle codes: "WFE-F, H, J, JZ, K, L, LZ, S, SZ"..... 4662-1 7.50

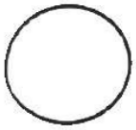



4669 RETAINER SEAL, Rear Diff. Pinion Bearing

66-86 W/Ford 9" RA..... 4669-1 1.94

4676 BEARING SEAL, Diff. Pinion

66-71 (b4 71 ser#K20,001), front, w/Dana 30 FA T-4676-1 14.50
71-96 (from 71 ser#K20,001), front, w/Dana 44 FA, excl 3.07, 3.54, 4.09 ratios..... T-4676-1 14.50
66-79 Front, w/Ford 9" RA 4676-2 10.65
80-83 Front, w/Ford 9" RA, codes: "WDM, WFE" 4676-2 10.65
83-96 Front, w/Ford 8.8" RA F-4676-5 15.70



4880-1K

4880 CLUTCH & DISC REBUILD KIT, Axle Differential

66-69 Equa-Loc differential, Ford 9" RA, axle tag codes WEM-B, B1X, D, F, F1X, WEN-B, B1X, D, F, F1X 4880-1K 124.95
83-96 Traction-Lok differential, Ford 8.8" RA F-4880-5K 107.95
68-86 Traction-Lok differential, Ford 9" RA 4880-2K 85.95

4945 CLUTCH PLATE, Locking 9" Differential

68-86 Ford 9" Trac-Loc RA, 4 reqd... 4945-2 40.00

4947 CLUTCH PLATE, Locking Differential

68-86 Ford 9" Trac-Loc RA, 4 reqd... 4947-2 30.00

CHARGING/IGNITION/STARTING/ WIRING SECTION INFORMATION

Alternator .....pg 85 Voltage regulator..... pg 85
Battery.....pg 86 Starter..... pg 88
Ignition .....pg 88 Wiring..... pg 92

Some abbreviations found in this section (alphabetical-read across):

amp .....Amperes chrg... charge (core charge)
dia..... diameter excl ..... excluding
GVW.. Gross vehicle weight HD ..... Heavy duty
incl ..... includes l .. litre (metric engine size)
LH ..... drivers side pc (s) .....Piece (s)
Repl'mt..... Replacement reqd.....Required
reqs ..... Requires RH ..... passenger side
ser# ..... serial number w/ .....Used with
W/o.....Used without #..... pounds-when used following a number (8500#= 8500 pounds)
A complete listing of abbreviations may be found at the rear of this catalog.

ALTERNATOR



10156 BRACKET SET, Chrome Alternator Mounting

66-77	289, 302, black	10156-1A	14.95
65-77	289, 302, chrome	10156-1B	13.95
66-77	289, 302, chrome aluminum	10151-1C	92.95

May not work with all options or accessories.



10A310FAN AND PULLEY, Alternator Chrome

60-84	Chrome, fan, single pulley, washer and nut	10A310-2B	14.95



10317 SPLASH SHIELD, Alternator

78	3 hole mount	F-10317-1	17.50



10346 ALTERNATOR, Rebuilt

Note core charge on each item. See core charge info for restrictions on core returns. Core charge $40 unless noted otherwise.

66-74	170, 200, opt. 65 amp	F-10346-5	124.95
66-68	289, opt. 65 amp., w/brush holder on back	F-10346-5	124.95
86-89	300, integral regulator, offset ear, 60 amp.	F-10346-10	104.95
86-89	300, integral regulator, straight ear, 60 amp.	F-10346-11	99.95
90-92	300, standard, internal regulator, 60 amp.	F-10346-10	104.95
90-92	300, optional, internal regulator, 75 amp.	F-10346-13	99.95
69-74	302, opt. 65 amp., w/brush holder on back	F-10346-5	124.95
5-78	302, 351, opt. 90 amp	F-10346-7	96.95
86-89	302, 351, std. 60 amp., w/integral regulator	F-10346-11	99.95
86-90	302, 351, opt. 75 amp., w/integral regulator, excl 90 351	F-10346-12	99.95



93-96	302, 351, standard, internal regulator, 95 amp., core chrg $60	F-10346-18	134.95
78	400, opt. 90 amp	F-10346-7	96.95

See next section for chrome alternators.

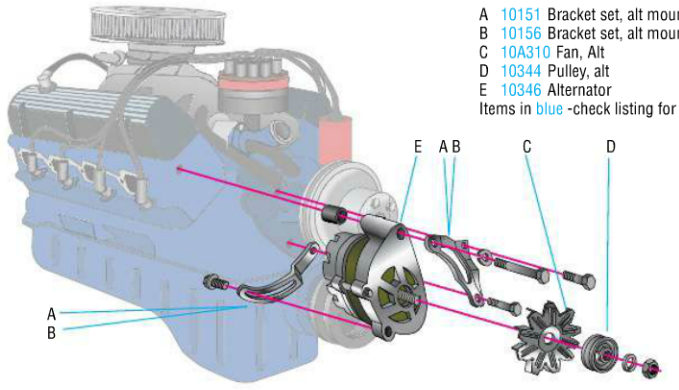

A 10151 Bracket set, alt mounting custom
B 10156 Bracket set, alt mounting stock style
C 10A310 Fan, Alt
D 10344 Pulley, alt
E 10346 Alternator
Items in blue -check listing for applications



10346 ALTERNATOR, Rebuilt CHROME

70-85	289, 302, 351, 400, 60 amp., incl fan and sngl pulley	10346-3D	143.95
70-85	302, 351, 400, 100 amp., incl fan and sngl pulley	F-10346-7C	209.95
86-89	300, 302, 351, 65 amp., w/integral regulator	F-10346-11C	224.95
68-78	302, ext. reg.	10346-3D	143.95
89-90	302, integral regulator., 80 amp	F-10346-12C	214.95
89-90	300, 75 amp., w/integral regulator	F-10346-12C	214.95
89	351, 75 amp., w/integral regulator	F-10346-12C	214.95
80-85	300, 70 amp., w/external regulator	F-10346-7C	209.95

VOLTAGE REGULATOR

10316 MOUNTING KIT, Regulator

65-96	Standard	10316-1K	1.00
66-67	Concours, "D" logo, (3)	10316-1AK	1.50
68	Concours, "D" logo, (3)	10316-2AK	1.50
69-70	Concours, "D" logo, (3)	10316-3AK	2.00



10C316 COVER ONLY, Voltage Regulator, Relay Type

68-70	"Autolite", blue cover and silver ink, concours approved	10C316-7A	16.00
70-71	"Autolite", blue cover and silver ink, concours approved	10C316-3A	16.00
68-71	"Autolite", blue cover and yellow ink, concours approved	10C316-2A	16.00
66-67	"Autolite", black cover and yellow ink, concours approved	10C316-1C	16.00



10316 VOLTAGE REGULATOR, Alternator, Motorcraft

66-72	All eng's w/38, 42, 45 amp., w/o transistorized ignitions	10316-1	36.95
73-79	All	10316-1	36.95
80	All eng's, w/60 amp., w/o integral regulator	10316-1	36.95
80-89	All eng's, all amps	F-10316-4	55.95
90-92	W/o IRA alt.	10316-1	36.95
90-96	W/IRA alt.	F-10316-4	55.95



Reproductions listed below duplicate the style and cover lettering used originally.
AF units were used with 38 & 45 amp alternators and TF units with 55 amp alternators. These repros are the same internally and are all rated for use with 60 amp alternators. These regulators feature 1) Exact artwork 2) Correct terminal opening. 3) Wax sealed base per original. 4) Original screws or rivets. 5) OE wide design terminals. 6) Tough electro-mechanical design. 8) Manufactured by a Q9000 (ISO 9002) company.

66-67	"Autolite" & "C5AF-10316-A" markings, black w/ silver ink	10316-1A	38.50
66-67	"Autolite" & "C5TF-10316-A" markings, black w/ yellow ink	10316-1C	38.50
68-70	"Autolite" & "C8AF-10316-A" markings, blue w/ silver ink	10316-7A	38.50
68-71	"Autolite" & "C8TF-10316-A" markings, blue w/ yellow ink	10316-2A	38.50
70-71	"Autolite" & "D0AF-10316-A" markings, blue w/ silver ink	10316-3A	38.50
72	"Motorcraft" & "D2AF-10316-A" markings, blue w/ silver ink	10316-4A	38.50
72	"Motorcraft" & "D2TF-10316-A" markings, blue w/ yellow ink	10316-6A	38.50
73	"Motorcraft" & "D3AF-10316-A" markings, blue w/ silver ink	10316-8A	38.50
73	"Motorcraft" & "D3TF-10316-A" markings, blue w/ yellow ink	10316-9A	38.50

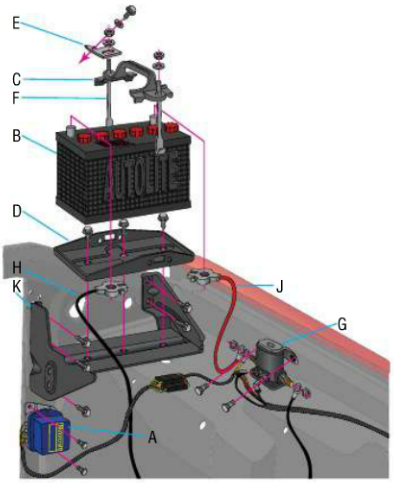

A	10316	Voltage regulator	F	10756	Bolt, battery clamp
B	10655	Battery	G	11450	Solenoid
C	10718	Holddown	H	14300	Battery cable
D	10732	Battery tray	J	14301	Battery cable
E	10A691	Bracket, holddown	K	16C186	Reinforcement, tray

Items in blue-check listings for applications.

BATTERY



DELTRAN BATTERY TENDER®, Battery Charger & Maintainer

Not just a 12v charger or trickle charger. This 1.25amp, constant current Super Smart® Battery Tender® is so advanced it fully charges your cars battery and then maintains the full charge indefinitely by automatically switching from full charge to storage charge. It won't overheat or overcharge your battery. It doesn't "cycle" your battery-something that will shorten the life of a battery. It even adjusts for temperature. It's unique micro-chip circuitry won't even short out or spark if you touch clips! Storing your car for the winter? Or even your boat? Remove the battery and leave it hooked to the Super Smart® Battery Tender® and you will have a fresh, fully charged battery when you need it-without sacrificing your battery's well being.

12v 919-1 52.50



New Battery Tender® Jr. is a more compact unit with 750 mAmp current. This unit will fully charge a battery easily overnight and maintain the charge just like it's larger brother.

12v 919-4 31.50



JUMPER CABLES, Compact

These compact jumper cables have all the capacity of clumsey full size sets (200 amp rated) but in a size that when rolled up into the included nylon bag will fit into many glove boxes and easily under seats. 8 foot long, 8 gauge cables are safe and convenient. Keep a set in each of your vehicles.

..... 936-1 11.95



10656 COVER, STA-FUL Battery

66-73 Exact duplicate of the top of the original 24F sta-ful Autolite battery. Get the look of an original with the ease of a maintanence free battery. Works to cover 24F50 and 24F60 flat top maint. free batteries from several suppliers including Sears, NAPA and Carquest. 10656-1A 39.95



10A717WASHER, Battery Terminal

66-98 Prevents corrosion of terminals, oil impregnated felt ..... F-10A717-1 CALL

10718 HOLD DOWN, Battery to Tray



66-69	Metal w/plastic dip, repro	10718-2A	6.40
70-76	All	10718-5A	9.95



77-79	All	F-10718-6	12.50
80-86	(from 6/80), LH, w/dual battery	F-10718-6	12.50
87-96	RH	F-10718-11	3.99

10732 CARRIER ASSY, Battery



66-77 (from 66 ser# 760,001), repro F-10732-11A 29.95



78-79 RH, repro F-10732-4A 20.95



94-96 RH F-10732-16 85.98



10A691 BRACKET, Battery Tray

80-86		F-10A691-3	11.95



10756 BOLT, Battery Clamp

66-77	2 reqd	F-10756-6	19.95
78-79	2 reqd	F-10756-4	5.25
80	(b4 6/80), RH, 2 reqd	F-10756-4	5.25
80	LH, w/dual battery, 2 reqd	F-10756-4	5.25
81-86	2 reqd	F-10756-4	5.25



10756 BOLT KIT, Battery Clamp

66-79	2 replacement style painted rods & nuts	10756-1K	3.95
66-79	Concours, phosphate coated rods and nuts	10756-1AK	5.95



14303 CABLE ASSY, Engine Ground

66-77	Replacement, 12", 4 ga.	14303-1	9.50
66-67	Concours	14303-1A	9.95
68-70	Concours	14303-2A	9.95

BATTERY CABLES

6 CYLINDER LISTINGS

Year	Fits	Battery to Switch	Battery to Ground	Switch to Starter
66-70	170	F-14301-10	F-14300-7	F-14431-4
71-72	170, 200	F-14300-2	F-14301-3	F-14431-1
73	200	F-14300-2	F-14301-3	F-14431-7
74	200	F-14300-2	F-14301-3	F-14431-1
80-81	300 (4.9l), single battery	F-14300-2	▼	-
	front (battery end)		F-14301-10	
	center position		F-14301-2	
	rear		F-14431-6	
80-81	300 (4.9l), dual battery	F-14300-3	F-14300-2	-
82-83	300 (4.9l), single battery	F-14300-2	F-14300-14	F-14431-7
82-83	300 (4.9l), dual battery	F-14300-3	F-14300-2	F-14431-7
84	300 (4.9l), w/o EEC IV, single battery	F-14300-2	F-14300-14	F-14431-7
84	300 (4.9l), w/o EEC IV, dual battery	F-14300-3	F-14300-2	F-14431-7
85	300 (4.9l), single battery	F-14300-2	F-14300-14	F-14431-7
85	300 (4.9l), dual battery	F-14300-3	F-14300-2	F-14431-7
86	300 (4.9l)	F-14300-2	▼	F-14431-7
	front (battery side)		F-14300-9	
	rear		F-14301-6	
87	300 (4.9l)	F-14301-10	▼	F-14431-9
	front (battery side)		F-14300-9	
	rear		F-14301-5	
88	300 (4.9l), single battery	F-14301-10	F-14300-2	F-14431-9
88	300 (4.9l), dual battery	F-14300-3	▼	F-14431-9
	front (battery side)		F-14300-7	
	rear		F-14431-6	
89-91	300 (4.9l)	F-14301-10	▼	F-14431-9
	front (battery side)		F-14300-7	
	rear		F-14301-5	
92	300 (4.9l)	F-14300-11	▼	-
	front (battery side)		F-14301-4	
	rear		F-14301-5	

8 CYLINDER LISTINGS

Year	Fits	Battery to Switch	Battery to Ground	Switch to Starter
66-70	289, 302	F-14301-10	F-14301-11	F-14431-4
71-72	302	F-14300-2	F-14301-3	F-14431-1
73	302	F-14300-2	F-14301-3	F-14431-7
74-75	302	F-14300-2	F-14301-3	F-14431-1
76-77	302	F-14300-2	F-14300-7	F-14431-1
78	351M, 400, dual battery	F-14300-9	F-14300-11	14431-3
78	351M, 400, dual battery, battery to battery			F-14301-13
78-79	351M, 400, single battery	F-14301-10	F-14301-12	14431-3
79	351M, 400, dual battery	F-14300-7	F-14300-11	14431-3
79	351M, 400, dual battery, battery to battery			F-14301-13
80	302, 351W, single battery	F-14300-2	F-14300-11	F-14431-3
80	302, 351W, dual battery	F-14300-3	F-14300-2	F-14431-3
81	302, 351W, single battery	F-14300-2	F-14300-11	F-14431-3
81	302, 351W, dual batttery	F-14300-3	F-14300-2	F-14431-3
82	302, 351W, single battery, w/o EEC-IV	F-14300-2	F-14300-11	F-14431-3
82	302, 351W, EEC-IV, single battery	F-14300-2	▼	F-14431-3
	front (battery side)		F-14300-9	
	rear		F-14301-2	
82	302, 351W, dual battery	F-14300-3	F-14300-2	F-14431-3

8 CYLINDER LISTINGS-continued

Year	Fits	Battery to Switch	Battery to Ground	Switch to Starter
83-85	302, 351W, single battery, w/o EEC-IV	F-14300-2	F-14300-11	F-14431-3
83	302, 351W, EEC-IV, single battery	F-14300-2	▼	F-14431-3
	front (battery side)		F-14300-9	
	rear		F-14301-2	
83	302, 351W, dual battery	-	-	F-14431-3
84-85	302, 351W, EEC-IV, single battery	F-14300-2	▼	F-14431-3
	front (battery side)		F-14300-9	
	rear		F-14301-2	
84-86	302, 351W, dual battery	F-14300-3	F-14300-2	F-14431-3
86	302, 351W, single battery	F-14300-2	▼	F-14431-3
	front (battery side)		F-14300-9	
	rear		F-14301-2	
87	302, 351W, single battery	F-14301-10	F-14300-3	F-14431-9
87	302, 351W, dual battery	F-14300-3	-	F-14431-9
88	302, 351W	F-14301-10	F-14301-14	F-14431-9
89	302, 351W	F-14300-3	-	F-14431-9
90	302 (5.0l), w/o EEC-IV	F-14301-10	F-14301-15	F-14431-9
90	351W (5.8l), under 8500# GVW	F-14301-10	F-14301-15	-
91	302 (5.0l)	F-14301-10	F-14301-15	F-14431-9
91	351W (5.8l)	F-14301-10	F-14301-15	-
92	302 (5.0l)	F-14300-11	▼	F-14431-9
	front (battery side)		F-14301-4	
	rear		F-14301-5	
92	351W (5.8l)	F-14300-11	▼	F-14431-9
	front (battery side)		F-14301-4	
	rear		F-14301-16	
93	302 (5.0l)	F-14300-11	-	-
93	351W (5.8l), Calif.	F-14300-11	F-14301-4	F-14431-9
93	351W (5.8l), exc. Calif.	-	F-14301-4	F-14431-9
94	302 (5.0l)	F-14300-6	F-14301-17	-
94	351W (5.8l)	F-14300-15	F-14301-18	F-14431-17
95	302 (5.0l), w/EEC-IV	F-14300-16	F-14301-17	-
95	302 (5.0l)	-	F-14301-17	-
95	351W (5.8l)	-	F-14301-18	-
96	302 (5.0l)	F-14300-18	F-14301-7&20	-
96	351W (5.8l), w/EEC-IV	F-14300-19	F-14301-18	-
96	351W (5.8l)	-	F-14301-18	-

BATTERY CABLE PRICING

F-14300-2 ..... 13.60	F-14300-18 .... 66.95	F-14301-10 .... 13.25	F-14301-18 .... 28.95
F-14300-3 ..... 22.30	F-14300-19 .. 113.95	F-14301-11 .... 15.25	14431-3 ..... 20.25
F-14300-7 ..... 17.40	F-14301-2 ..... 12.70	F-14301-13 .... 20.35	F-14431-1 ..... 15.40
F-14300-9 ..... 20.25	F-14301-3 ..... 12.60	F-14301-14 .... 31.40	F-14431-3 ..... 22.85
F-14300-11 .... 21.10	F-14301-4 ..... 19.20	F-14301-15 .... 32.55	F-14431-4 ..... 12.95
F-14300-14 .... 23.25	F-14301-5 ..... 16.80	F-14301-16 .... 12.35	F-14431-7 ..... 20.80
F-14300-15 .... 92.95	F-14301-6 ..... 12.35	F-14301-17 .... 40.25	F-14431-9 ..... 19.20
F-14300-16 .. 112.55			F-14431-17 .... 31.75

STARTER



11002 STARTER, Rebuilt

Note core charge of $70 on each item except as noted otherwise. See core charge information for restrictions on core returns. Starters are arranged by engine size, transmission, then year and application.

80-81	300, A/T, (b4 1/15/81)	F-11002-12	76.95
80-81	300, M/T, (b4 1/15/81)	F-11002-13	44.95
81-82	300, M/T, (from 1/15/81)	F-11002-27	64.95
83-91	300, M/T	F-11002-16	49.95
92	300, M/T, core chrg $125	F-11002-22	109.95
77-81	302, A/T, (from 2/1/77 to 1/15/81)	F-11002-12	76.95
77-81	302, M/T, (from 2/1/77 to 1/15/81)	F-11002-13	44.95
81-82	302, M/T, (from 1/15/81)	F-11002-27	64.95
83-91	302, M/T	F-11002-16	49.95
92-96	302, M/T, core chrg $125	F-11002-22	109.95
80	351W, A/T	F-11002-12	76.95
80	351W, M/T	F-11002-13	44.95
81-82	351W, M/T	F-11002-27	64.95
83-91	351W, M/T	F-11002-16	49.95
92-96	351W, M/T, core chrg $125	F-11002-22	109.95



STARTER, Rebuilt Super-Torque

Rebuilt with improved windings and parts to increase the torque output over stock.

Year	Applications	Black	Chrome
72	170, M/T	11002-6B	11002-6C
72-74	200, A/T	11002-6B	11002-6C
80-81	300, A/T, (b4 1/15/81)	11002-4B	11002-4D
80-81	300, M/T, (b4 1/15/81)	11002-5B	11002-5D
81-82	300, M/T, (from 1/15/81)	11002-5B	11002-5D
69-77	302, A/T, (b4 2/1/77)	11002-4B	11002-4D
69-77	302, M/T, (b4 2/1/77)	11002-5B	11002-5D
77-81	302, A/T, (from 2/1/77 to 1/15/81)	11002-4B	11002-4D
77-81	302, M/T, (from 2/1/77 to 1/15/81)	11002-5B	11002-5D
81-91	302, M/T, (from 1/15/81)	11002-5B	11002-5D
78-79	351M	F-11002-22A	F-11002-22C
80	351W, A/T	11002-4B	11002-4D
80	351W, M/T	11002-5B	11002-5D
81-82	351W, M/T	11002-5B	11002-5D
83-91	351W, M/T	11002-5B	11002-5D
78-79	400	F-11002-22A	F-11002-22C

Super Torque Starter Pricing

11002-4B	102.95	11002-4D	144.95
11002-5B	97.95	11002-5D	144.95
11002-6B	102.95	11002-6C	144.95
F-11002-22A	104.95	F-11002-22C	139.95

11A152SWITCH, Clutch Starter Interlock, Replacement

NEW!	84-86	On clutch pedal, replacement	F-11A152-1A	103.95
NEW!	88-96	Replacement	F-11A152-2A	63.75



11450 SOLENOID, Starter Relay

Motorcraft brand replacements.

66-78	(b4 78 ser#BE0,001)	11450-1	24.95
78-84	(from 78 ser#BE0,001), 12v	F-11450-4	24.95
85	302 (5.0l),, excl Calif.	F-11450-4	24.95
85-86	302 (5.0l), Calif.	F-11450-5	26.95
85-86	351W (5.8l), 2v, unleaded fuel	F-11450-5	26.95
85-92	300 (4.9l), unleaded fuel	F-11450-5	26.95
86-96	302 (5.0l)	F-11450-5	26.95
87-93	351W (5.8l)	F-11450-6	18.50
94-96	351W (5.8l)	F-11450-5	26.95

The repros listed below are exact duplicates of the original solenoids used in the factory. Several manufacturers and codes existed for each year. What we offer here are the most common styles. All have "RBM" logo. Case colors are brown or black as listed.

66-67	Black, "2701986", "FoMoCo" rectangular script	11450-2A	34.95
67-72	Black, "C7AF-11450-A1", "Autolite" script	11450-3A	34.95
72-73	Black, "D2AF-11450-AA", "Motorcraft" script	11450-4A	34.95

11450 MOUNTING KIT, Starter Solenoid

66-68	Concours, "D" logo, (2)	11450-2AK	1.50
69-73	Concours, (2)	11450-3AK	1.50

14526 FUSE LINK AND TERMINAL

NEW!	66	Replacement, next to solenoid on wheelhouse	14526-1B	14.95

IGNITION



11572 SWITCH ASSY., Ignition

66-77	Original style	11572-2	49.95
66-77	Replacement	11572-2A	11.95
78-79		F-11572-8	36.95
80-86		F-11572-9	18.50
87-89		F-11572-10	21.50
90-91		F-11572-11	13.70
92-93		F-11572-12	101.95
92-96	Replacement style	F-11572-13	22.75
95-96		F-11572-14	28.75



12029 COIL ASSY., Ignition

66-74	W/std. ign., yellow top coil, best reproduction of original design	12029-1A	34.95
74	w/breakerless ignition	F-12029-4*	71.50
75-83	Excl 77 Calif.	F-12029-5*	50.95
77	Calif.	F-12029-7	39.50
80-83	300	F-12029-5*	50.95
84-86	300	F-12029-6	65.75
84-86	302, 351-2v	F-12029-6	65.75
84-86	351-4v	F-12029-5*	50.95
87-96	300, 302, 351W	F-12029-6	65.75

****Motorcraft correct replacements.***

12043 BRACKET, Coil Mounting

66-96	OE style, black, repro	12043-1	11.95
66-96	OE style, stainless steel, repro	12043-1B	15.95



12106 CAP, Distributor

66-74	6 cyl., w/standard ignition	12106-2	20.95
75-77	6 cyl., w/standard ignition	F-12106-2	60.00
74	6 cyl., w/electronic ignition	12106-2	20.95
75-76	6 cyl., w/electronic ignition	F-12106-2	60.00
77-83	6 cyl., w/electronic ignition	F-12106-3	47.75
84-85	6 cyl., w/electronic ignition	F-12106-4	41.95
86-92	300	F-12106-4	41.95
66-77	8 cyl., w/standard ignition	12106-1	19.95
66	8 cyl., concours correct with "1", replacement for 67-77	12106-1	19.95
66-74	8 cyl., concours ready, high conductivity brass terminals, correct style materials & finish, with "1"	12106-1A	9.25
67-72	8 cyl., concours correct cap w/"Autolite" logo and "1", US made	12106-2A	24.75
74	8 cyl., w/electronic ignition	12106-1	19.95
75-76	8 cyl., w/electronic ignition	F-12106-7	37.50
77-96	8 cyl., w/electronic ignition, excl 82 302 dist#E1AE-12127-MA, E2TE-12127-GA, E2TE-12127-HA; 82-83 351W dist#E1AE-12127-LA	F-12106-8	41.75
82	302 w/dist#E1AE-12127-MA, E2TE-12127-GA, HA	F-12106-9	34.95
82-83	351W, w/dist#D9TE-12127-EA	F-12106-9	34.95

12A091VALVE ASSY, Distributor Vacuum Control, Replacement

NEW!	86-93	4.9l, ID code blue and black, replacement	F-12A091-2A	19.95
NEW!	90-96	5.0l, 5.8l, ID code blue and black, replacement	F-12A091-2A	19.95



12A112PICKUP ASSY, Distributor, Electronic Ignition

80-85	300	F-12A112-1	62.95
86	300, module on fender	F-12A112-1	62.95
86	300, module on distributor	F-12A112-2	56.50
87-91	300	F-12A112-2	56.50
92	300, module on distributor	F-12A112-2	56.50
92	300, module on LH apron	F-12A112-3	66.25
74-83	302, 351M/W, 400, excl ignitions with crankshaft position sensor	F-12A112-4	57.75
84-85	302, 351W, w/EEC-IV, bolt-on rotor	F-12A112-2	56.50
84-85	302, 351W, excl Calif., Hi-Alt or EEC-IV	F-12A112-4	57.75
85	302, 351W, w/Calif. or Hi-Alt	F-12A112-4	57.75
86-87	302, 351W, w/EEC-IV	F-12A112-2	56.50
86-87	302, 351W, w/o EEC-IV	F-12A112-4	57.75
88-91	302, 351W, w/EEC-IV	F-12A112-2	56.50
92-96	302, 351W	F-12A112-3	66.25


F-12A199-1

12A199/12A244/12A297/12K059/12K072 CONTROL MODULE, Ignition

OE style replacement modules. New not rebuilt. Order by matching the unit number, stamping numbers or ID number on the module being replaced. Modules fit only the numbers listed. Numbers must match exactly.

ID number	Order number	Price
D5AE-12A199-A1A	F-12A199-2	75.50
D5AE-12A199-A1B	F-12A199-2	75.50
D5AE-12A199-A1D	F-12A199-2	75.50
D5AE-12A199-A2A	F-12A199-2	75.50
D5AE-12A199-A2C	F-12A199-2	75.50
D6AE-12A199-A1A	F-12A199-9	89.50
D6AE-12A199-A1C	F-12A199-9	89.50
D6AE-12A199-A2A	F-12A199-9	89.50
D6AE-12A199-A2B	F-12A199-9	89.50
D6AE-12A199-A2C	F-12A199-9	89.50
D8AE-12A244-A1A	F-12A199-6	79.95
D8AE-12A244-AA	F-12A199-6	79.95
D8AE-12A244-AB	F-12A199-6	79.95
D8VE-12A199-A1B	F-12A199-9	89.50
D8VE-12A199-A1C	F-12A199-9	89.50
D8VE-12A199-A1L	F-12A199-9	89.50
D8VE-12A199-A2B	F-12A199-9	89.50
D8VE-12A199-A2C	F-12A199-9	89.50
D9DE-12A199-B1A	F-12A199-10	128.95
D9DE-12A199-B1B	F-12A199-10	128.95
D9DE-12A199-B1C	F-12A199-10	128.95
D9DE-12A199-B2A	F-12A199-10	128.95
D9DE-12A199-B2B	F-12A199-10	128.95
D9DE-12A199-B2C	F-12A199-10	128.95
D9DE-12A199-BB	F-12A199-10	128.95
E1AE-12A244-AA	F-12A244-1	128.95
E3EF-12A297-A1A	F-12A297-1	139.95
E3EF-12A297-A2A	F-12A297-1	139.95
E6EF-12A297-AA	F-12A297-1	139.95
E6SF-12A297-A1A	F-12A297-2	158.95
E6SF-12A297-A2A	F-12A297-2	158.95
E7DF-12A297-A1A	F-12A297-3	141.95
E7DF-12A297-A2A	F-12A297-3	141.95
E8PF-12A244-AA	F-12A199-6	79.95
E8PF-12A199-AA	F-12A199-9	89.50
E8PF-12A199-AB	F-12A199-9	89.50
F1FP-12A297-AA	F-12A297-4	77.75
F1SF-12A297-C1A	F-12A297-4	77.75
F1SF-12A297-C2A	F-12A297-4	77.75
F2SZ-12K072-AA	F-12A297-4	77.75
F3XY-12K059-AA	F-12K059-1	122.50


Visit us ONLINE at:
www.nationalpartsdepot.com
-or-
www.npdlink.com



12127 DISTRIBUTOR, Rebuilt

Note core charge of $80 on each rebuilt distributor ordered. See Information page for core return requirements.

Steel and cast iron gear distributors are NOT interchangable! Steel gears are used mostly with roller cam engines. Switching gear materials from stock will result in wiping out the camshaft, distributor or both! Verify your gear type before ordering.

6 CYLINDER ENGINES:

68-72	170, single vacuum	F-12127-1	64.95
68-72	170, dual vacuum	F-12127-2	59.95
66-67	170, w/o thermactor emissions	12127-1A	61.50
66-67	170, w/thermactor emissions.	F-12127-1	64.95
72-74	200, single vacuum	F-12127-1	64.95
72-74	200, dual vacuum	F-12127-2	59.95
80-87	300 (4.9l), single vacuum, electronic ignition	F-12127-11	69.95
80-85	300 (4.9l), dual vacuum, electronic ignition	F-12127-12	61.50
83-86	300 (4.9l), w/o vacuum, note rotor may not be correct for application	F-12127-13	91.50
87-91	300 (4.9l), w/o vacuum	F-12127-14	86.95
92	300 (4.9l)	F-12127-15	99.95

8 CYLINDER ENGINES:

66-68	289, single vacuum	12127-4A	68.50
66-68	289, dual vacuum	F-12127-21	59.95
69-73	302, single vacuum, standard ignition, w/o governor	12127-4A	68.50
69-73	302, dual vacuum, standard ignition, w/o governor	F-12127-21	59.95
74	302, single vacuum, standard ignition, w/o governor	12127-4A	68.50
74	302, single vacuum, electronic ignition, cast iron gear, w/o governor	F-12127-16	63.95
74	302, dual vacuum, standard ignition, w/o governor	F-12127-21	59.95
74	302, dual vacuum, electronic ignition, w/o governor	F-12127-18	68.50
75-80	302 (5.0l), single vacuum, electronic ign., cast iron gear, w/o governor	F-12127-16	63.95
75-80	302 (5.0l), dual vacuum, electronic ignition, w/o governor	F-12127-18	68.50
81-83	302 (5.0l), w/o vacuum	F-12127-22	51.50
84	302 (5.0l), EEC-IV, cast iron gear, w/o vacuum	F-12127-23	81.50
81-83	302 (5.0l), single vacuum, electronic ignition, cast iron gear	F-12127-16	63.95
81-83	302 (5.0l), dual vacuum, electronic ignition	F-12127-18	68.50
84	302 (5.0l), single vacuum, cast iron gear, 5/16" hex oil pump shaft hole	F-12127-24	59.50
84	302 (5.0l), single vacuum, cast iron gear, 1/4" hex oil pump shaft hole	F-12127-16	63.95
84	302 (5.0l), dual vacuum	F-12127-18	68.50
85	302 (5.0l) EFI, cast iron gear	F-12127-26	82.95
85	302 (5.0l) EFI, steel gear	F-12127-27	102.95
86-91	302 (5.0l), cast iron gear	F-12127-26	82.95
86-91	302, steel gear	F-12127-27	102.95
92-96	302	F-12127-28	104.95
78	351M (5.8l), single vacuum, w/o governor	F-12127-40	63.95
78	351M (5.8l), dual vacuum, w/o governor	F-12127-41	72.95
80	351W (5.8l), w/o governor, single vacuum	F-12127-24	59.50
80	351W (5.8l), dual vacuum, w/o governor	F-12127-29	61.50
81-83	351W (5.8l), w/o vacuum	F-12127-30	51.50
81-85	351W (5.8l), single vacuum	F-12127-24	59.50
81-85	351W (5.8l), dual vacuum	F-12127-29	61.50
84-85	351W (5.8l), w/o vacuum, note rotor may not be correct for application	F-12127-31	84.95
86-87	351W (5.8l)	F-12127-24	59.50
88-91	351W (5.8l), 89-91 module on distributor	F-12127-33	85.95
90-95	351W (5.8l), remote mounted module, cast iron gear	F-12127-34	97.95
93	351W (5.8l), steel gear	F-12127-35	60.50
96-97	351W (5.8l), steel gear	F-12127-35	60.50
78-79	400 (6.6l), single vacuum, w/o governor	F-12127-40	63.95
78-79	400 (6.6l), dual vacuum, w/o governor	F-12127-41	72.95

NEW!

12200-1




F-12200-4

12200 ROTOR, Distributor

OE Motorcraft brand unless noted as a replacement.

66-68	6 cyl, w/ std ign., replacement	12200-1A	7.75
69-74	200, w/standard ignition	12200-2A	7.75
74	200, w/electronic ignition	12200-2A	7.75
66-68	289	12200-3	6.95
80-84	300 (4.9l)	F-12200-3	7.75
85	300 (4.9l), ID#'s D9TE-12127-ADA, D9RE-12127-AEA	F-12200-3	7.75
86	300 (4.9l), ID#'s E6TE-12127-AA, BA	F-12200-3	7.75
85-86	300 (4.9l), ID#'s E4TE-12127-AA, E5TE-12127-MZ, NZ, E4TE-12332-AA	F-12200-5	15.95
87	300 (4.9l), M/T	F-12200-5	15.95
87	300 (4.9l), A/T	F-12200-3	7.75
88-92	300 (4.9l)	F-12200-5	15.95
69-76	302, 74-76 w/electronic ignition	12200-3	6.95
77	302	F-12200-4	7.75
80-81	302 (5.0l)	F-12200-4	7.75
82	302 (5.0l), excl ID#'s E1AE-12127-MA, E2TE-12127-GA, HA	F-12200-4	7.75
82	302 (5.0l), ID#'s E1AE-12127-MA, E2TE-12127-GA, HA	F-12200-7	18.95
83-84	302 (5.0l)	F-12200-4	7.75
85	302 (5.0l) 2v	F-12200-8	13.95
85-91	302 (5.0l) EFI, excl ID#E5TE-12A332-AA	F-12200-9	29.75
85-91	302 (5.0l) EFI, ID#E5TE-12A332-AA	F-12200-8	13.95
92-96	302 (5.0l)	F-12200-8	13.95
78-79	351M (5.8l)	F-12200-4	7.75
82-84	351W (5.8l), excl 82-83 ID#E1AE-12127-LA	F-12200-4	7.75
82-83	351W (5.8l), ID#E1AE-12127-LA	F-12200-7	18.95
85-86	351W (5.8l)	F-12200-4	7.75
87	351W (5.8l)	F-12200-9	29.75
88-96	351W (5.8l)	F-12200-8	13.95
78-79	400 (6.6l)	F-12200-4	7.75



12171 POINT SET, Distributor

66-74	6 cyl., w/standard ignition	12171-1	18.95
66-77	8 cyl., w/standard ignition, Motorcraft	12171-3	18.95
66-77	8 cyl., w/standard ignition, replacment	F-12171-3	3.95



12300 CONDENSOR, Distributor

66-68	6 cyl., w/std. ign.	F-12300-1	2.95
69-77	6 cyl., w/std. ign.	12300-1	10.50
66-77	8 cyl., w/std. ign.	12300-1	10.50



12143 SEAL, Distributor Base

66-73	6 cyl.	12143-3	CALL
66-73	8 cyl., O-ring, square cross section	12143-1	1.95
66-96	8 cyl., O-ring, round cross section	12143-2	1.95



12A217 ADAPTER, Distributor Cap

80-92	300	F-12A217-1	14.85
77-88	8 cyl., w/o EEC	F-12A217-2	17.25
82-85	8 cyl., w/EEC, push-on rotor	F-12A217-3	14.80
82-88	8 cyl., w/EEC, bolt-in rotor	F-12A217-4	26.95
86-88	8 cyl., w/EEC, 3 stage round rotor	F-12A217-5	23.25
89-96	8 cyl.	F-12A217-4	26.95

12250 RESISTOR, Ignition Coil

69-70		F-12250-2	11.41

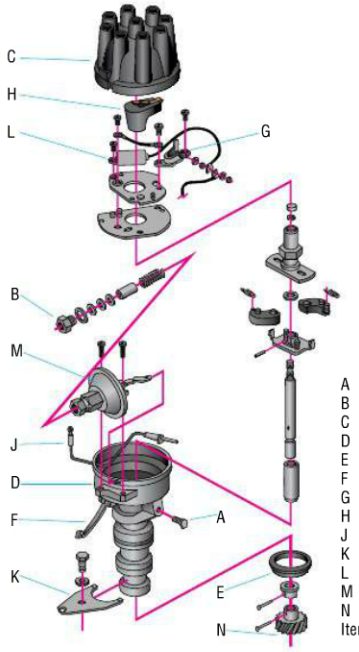

A 10141 Cap assy, oil fill hole
B 12A022 Fitting, vac. advance
C 12106 Distributor cap
D 12127 Distributor assy
E 12143 O-ring, distributor base
F 12144 Clamp arm, cap
G 12171 Point set
H 12200 Rotor
J 12216 Wire, primary
K 12270 Clamp, holddown
L 12300 Condensor
M 12370 Vacuum advance
N 12390 Gear, drive
Items in blue-check listings for applications.



12259 WIRE SET, Spark Plug

Replacements except as noted.

66-68	170	F-12259-25	21.70
69-74	170, 200	F-12259-4	50.00
80-92	300 (4.9l)	F-12259-8	38.95
66-68	289	F-12259-30	32.55
69	302	F-12259-5	32.95
70	302	F-12259-30	32.55
71	302	F-12259-6	29.50
72-74	302	F-12259-7	35.95
75-76	302	F-12259-10	42.95
77	302	F-12259-11	48.40
78-84	302 (5.0l)	F-12259-14	57.25
85-87	302 (5.0l)	F-12259-20	52.95
88-96	302 (5.0l), w/EEC IV	F-12259-17	57.25
78-79	351M, 400	F-12259-12	49.95
80-82	351W (5.8l)	F-12259-14	57.25
83-87	351W (5.8l)	F-12259-17	57.25
88-96	351W (5.8l)	F-12259-21	57.25



12270 CLAMP, Distributor Holddown

66-84	OE style	12270-1	8.25
66-84	Chrome w/chrome bolt	12270-1A	2.95

12270 MOUNTING KIT, Distributor Hold-down Clamp

66-84		12270-1K	1.50





12297 GROMMET, Ignition Cable

73-77	302	12297-1	0.95
66-79	289, 302, 351M, 400, on valve cover	12297-2	1.53
80-96	300, 302, 4 wire holder	F-12297-5	CALL



12370 DIAPHRAGM, Vacuum Advance

86	4.9l, distributor ID# D5TE-MA, UA, D6TE-AA	F-12370-8	50.65
80-85	4.9l, distributor ID# D5TE-MA, UA, D6TE-AA	F-12370-13	40.45
74	302, distributor ID# D6TE-EA.	F-12370-8	50.65
77-80	302 (5.0l), distributor ID# D7TE-EA, D8TE-UA, D9TE-AHA, E0TE-BA, JA, MA, NA	F-12370-12	68.95
81-82	5.0l, distributor ID# E0TE-KA, E1TE-KA	F-12370-7	71.75
83-84	5.0l, distributor ID# E3TE-AA.	F-12370-11	69.95
83-84	5.0l, distributor ID# E43E-HA.	F-12370-7	71.75
78-79	351M, distributor ID# D7TE-AHA	F-12370-14	71.75
78-79	351M, distributor ID# D7AE-BA, D7TE-BA, NA, D8TE-PA, D9TE-DA, GA, E0TE-HA, LA, E0UE-CA	F-12370-12	68.95
78-79	351M, distributor ID# D8TE-RA	F-12370-10	63.75
80	5.8l W, distributor ID# D7UE-DA, FA, LA	F-12370-14	71.75
82-84	5.8l W, distributor ID# D7UE-LA	F-12370-14	71.75
80	5.8l W, distributor ID# D7UE-BA	F-12370-12	68.95
80	5.8l W, distributor ID# D7UE-AA, EA, D8UE-AA, D8TE-BA	F-12370-10	63.75
78-79	400, distributor ID# D7TE-AHA	F-12370-14	71.75
78-79	400, distributor ID# D7AE-BA, D7TE-PA, D8TE-FA, GA, D9TE-DA	F-12370-12	68.95



12390 DISTRIBUTOR GEAR

66-74	170, 200	12390-1	34.50
80-95	300, replacement	F-12390-2	31.70
69-86	302, excl roller cam engines	12390-2	46.50
85-94	302 (5.0l), replacement	F-12390-3	45.95
78-93	351W, excl roller cam engines	12390-3	32.95
95	351W (5.8l), replacement	F-12390-3	45.95



Performance Ignition





12127-2B 12127-2D

IGNITOR by Pertronix

Never change points again and enjoy a better spark with more consistant timing over your original breaker type system. All components fit inside the distributor and the only visible difference outside the distributor are two wires exiting the distributor body running to the coil in place of one wire.

Some of the advantages of the Ignitor are: elimination of minor tune ups, increase spark plug life 2 to 3 times, improved fuel economy, maintains constant timing and the Ignitor will fire to zero RPM for fast starts in cold weather. The entire system is immune to dirt, oil, heat and moisture. Installation is fast and simple. 30 month manufacturer warranty. Applications listed for all Ford products not just Bronco!

65-67 170, 200, w/solid distributor shaft (not hollow), may req. modification to mtg holes 12A112-5 80.75
65-74 All Ford 6 cyl., hollow distributor shaft only 12A112-1 80.75
57-74 All Ford 8 cyl. w/single point.. 12A112-2 78.75
60-73 All Ford 8 cyl. w/dual points... 12A112-3 80.75
60-73 All Ford 8 cyl. w/dual points and vacuum advance 12A112-4 80.75

IGNITOR II by Pertronix

New improved Ignitor has a brain! Internal chip can adjust dwell for maximum performance in all conditions. It will adjust for RPM, temperature and load. This new system develops 3 times the available energy between 3000-5000 rpm and nearly doubles the spark voltage over the original Ignitor when paired with a Flame-Thrower. 45,000 volt low resistance coil (required & sold separately.)

65-73 170, 200, solid shaft distributor only 12A112-5A 115.95
65-73 6 cyl., hollow shaft dist only... 12A112-1A 115.95
57-74 8 cyl. single point..... 12A112-2A 115.95
60-73 8 cyl. dual point, w/o vac adv. 12A112-3A 115.95
60-73 8 cyl. dual point, w/vac adv.... 12A112-4A 115.95

FLAME THROWER COIL, PerTronix

40,000 volt Pertronix I

Maximize energy and reliability over full RPM range. Enables wider plug gap for greater fuel efficiency and power. An excellent companion to the Ignitor module.

65-73 Black oil filled..... 12029-3A 32.75
65-73 Chrome oil filled..... 12029-3B 36.75
65-73 Super duty, black epoxy 12029-3C 39.95

45,000 volt Pertronix II

Maximize energy and reliability over full RPM range. Enables wider plug gap for greater fuel efficiency and power. Special low-resistance version for use only with the Ignitor II module.

65-73 Black oil filled..... 12029-5A 37.50
65-73 Chrome oil filled..... 12029-5B 41.75
65-73 Super duty, black epoxy 12029-4C 44.25

DISTRIBUTOR, Pertronix Ignitor II HEI

Brand new distributor using proven HEI design, 50,000 volt coil and Ignitor II module team to provide a superior spark on the street or the track. Designed and tested to operate without a misfire up to a minimum of 7500 RPM. 67% more energy at the coil compared to stock HEI systems. More accurate spark timing across the RPM range. Spark duration and more energy to the spark plug allows wider gaps (.050-.055") increasing flame kernal growth and provides nearly twice the enegry across that gap. May not fit all high rise intake manifolds,.

STREET/STRIP model includes vacuum advance.

65-73 260, 289, 302, 2x the energy at the plug compared to Pertronix 1..... 12127-2B 283.95

RACE STYLE mechanical advance only. 2.5x-3x the energy at the plug compared to Pertronix 1. No vacuum advance and HD welded mechanical advance for improved performance.

65-73 260, 289, 302..... 12127-2C 349.95

DISTRIBUTOR, Flame Thrower II Billet

CNC machined from 6061 T-6 Aluminum alloy and polished to a beautiful finish. Special bearings reduce friction and high RPM vibration. Factory configured performance curve can be easily adjusted with included springs and mechanical advance adjust feature. Compatible with most capacitive discharge systems. 50 state CARB legal. Black cap with female terminals fit a variety of ignition wires. Requires Flame Thrower II coil.

65-73 260, 289, 302, w/vac advance 12127-2D 255.95
69-70 351W, w/vac advance..... 12127-3D 255.95
70-73 351C, 429, w/vac advance 12127-4D 255.95
65-73 260, 289, 302, w/mechanical advance only 12127-2E 255.95
69-70 351W, w/mech advance 12127-3E 255.95
70-73 351C, 429, w/mech advance.. 12127-4E 255.95



CAP and ROTOR KIT, Hi-Performance

66-88 8 cyl., larger size reduces cross-firing, use with 9mm or 8mm Flame-Thrower wires for a true performance ignition set-up... 12106-3 79.95

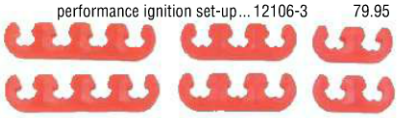

12297 SEPARATOR, Performance Wires

Fits 8mm and 9mm performance wires below. Sets include 2-4 wire, 2-3 wire and 2-2 wire separators in Blue (B) or Red (C). Specifiy color code at end of part number.

65-73 Set of 6 ..... 12297-3_ 3.95



FLAME-THROWER™ Wires, by Pertronix

These low resistance high performance ignition wires complete the Pertronix "Tri-fecta" of ignition upgrade. Both 7mm custom and 8mm MAGx2™ wires feature two current paths 1) Spiral wound stainless steel alloy. 2) Carbon impregnated fiberglass center core. Also note these state-of-the-art features: •Low 500 ohm per foot resistance. •Silicone jackets to resist high temps, moisture, oils and chemicals. •EPDM rubber inner insulation for superior heat resistance and prevention of arcing and voltage leaks. •Fiberglass reinforcing braid for added strength and flexibility. •Lifetime mfgr warranty and made in the USA! 7mm wires are cut to length, crimped, and feature plain black wires with no printing for OE look. 8mm wires feature 2 colors, Flame-Thrower™ lettering and must be cut and crimped to length.

65-73 6 cyl, 7mm 12259-1F 37.75
65-71 260, 289, 302, 7mm 12259-2F 44.50
67-71 351, 7mm 12259-3F 44.50
72-73 302, 351, 7mm 12259-3F 44.50
8mm Blue sets, 115° plug boot ends, cut to fit 12259-8MB 53.95
8mm Red sets, 115° plug boot ends, cut to fit 12259-8MC 53.95

8mm cut to fit requires crimping terminal ends. See tool section for crimping pliers.



POWERCABLE, Ignition Wires

9mm blue, angled boots optimized for JBA headers. Fully assembled. Includes coil wire. Sized for SB Fords.

66-74 W/stock dist. cap. 12259-9MB1 71.25
66-96 W/12106-3 dist. cap..... 12259-9MB2 71.25

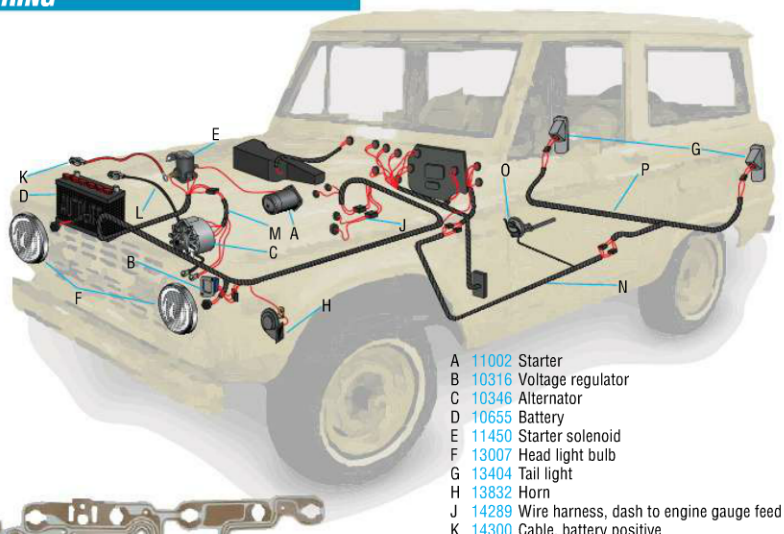

A 11002 Starter
B 10316 Voltage regulator
C 10346 Alternator
D 10655 Battery
E 11450 Starter solenoid
F 13007 Head light bulb
G 13404 Tail light
H 13832 Horn
J 14289 Wire harness, dash to engine gauge feed
K 14300 Cable, battery positive
L 14301 Cable, battery negative
M 14305 Wire harness, alternator feed
N 14405 Wire harness, tail light feed
O 9275 Fuel sending unit
P 13A409 Wire harness, tail light
Items in blue -check listing for applications.

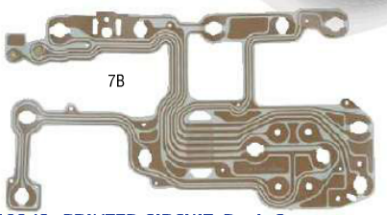

10843 PRINTED CIRCUIT, Dash Guage

78	W/warning lights	F-10843-5B	99.95
78-79	W/gauges	F-10843-5A	99.95
79	W/warning lights	F-10843-5B	99.95
80	W/gauges	F-10843-7B	99.95



376118 RETAING CLIP, Wiring

78-79 Antenna lead wire under glove box, plastic, (4) 376118-SK 4.00

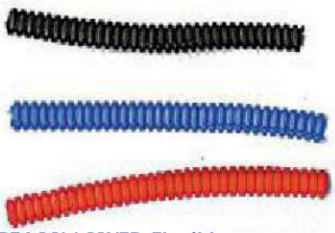

WIRE LOOM COVER, Flexible

Split flex tube to hide the wires on your custom truck. End the clutter for a clean custom touch. Add color code in parenthesis to end of part number shown. Example C-8965C-2A for black. Black (A), blue (E), red (C). Clean up and customize your engine compartment. SOLD PER FOOT.

66-96	1/4" I.D.	C-8965C-2_	0.50
66-96	1/2" I.D.	C-8965C-4_	0.60
66-96	3/4" I.D.	C-8965C-5_	0.75

10B866 EXTENSION WIRE, Water Temp Sender

67-70 170, use with 14289 engine gauge wire F-10B866-60 14.95



13711 SOCKET, Dash Light/Instrument Cluster

68-96	Instrument light w/1/2" hole and 194 bulb	C-9744-151A	1.95
74-77	A/T selector, w/1/2" hole and 194 bulb	C-9744-151A	1.95
90-96	A/T selector, w/1/2" hole and 194 bulb	C-9744-151A	1.95



14289 WIRE ASSY, Dash to Engine Gauge Feed

Includes wires for oil pressure & water temp., connects at firewall. Bronco wiring is duplicated from original blueprints.

67-68	289	F-14289-61	29.95
71-72	302	F-14289-65	29.95
73	302	F-14289-67	29.95
74	302	F-14289-69	199.95
75	302	F-14289-70	199.95
76	302, excl Canada	F-14289-70	199.95

EFI Engine Conversion- Engine compartment harness:

66-77	88-93 5.0l EFI engine	F-14289-80	749.95
66-77	94-95 5.0l if used with 88-93 Mustang intake & throttle body or GT-40 style intake & throttle body	F-14289-80	749.95
66-77	88-93 5.8l EFI mass air engine if used with 88-93 Mustang intake & throttle body or GT-40 style intake & throttle body	F-14289-80	749.95



14290 WIRE ASSY, Dash Panel to Head-lamp Junction

Connects at firewall and runs forward to headlamps, side markers, horns, voltage regulator and solenoid as required. Bronco wiring is duplicated from original blueprints.

67	W/38 or 45 amp alternator	F-14290-63	224.95
68	W/38 or 45 amp alternator	F-14290-65	224.95
68	W/55 amp alternator w/oil and amp gauge	F-14290-66	224.95
69	Excl 55 amp alternator	F-14290-67	224.95
70	W/38 or 45 amp alternator	F-14290-69	224.95
70	(from ser#H10,001), w/55 amp alternator	F-14290-69	224.95



14305 ALTERNATOR To REGULATOR WIRE

Connects to 14289 above and runs from below solenoid to alternator. Bronco wiring is duplicated from original blueprints.

66-70	Used with 38, 45 or 55 amp Ford alternator	F-14305-60	124.95
71-72	Used with 38, 45 or 55 amp Ford alternator	F-14305-61	129.95
73	302, used with 38, 45, 55 amp Ford alt.	F-14305-63	124.95
76-77	302	F-14305-65	124.95

13A409 WIRE ASSY, Tail Light

Connects tail light feed harness to tail lights. Duplicated from Ford blueprints.

67-69		F-13A409-63	CALL
70		F-13A409-64	CALL
71-77		F-13A409-65	CALL

14405 WIRE ASSY, Tail Light Feed

Connects underdash harness to tail light harness. Duplicated from Ford blueprints.

67-69		F-14405-60	114.95
70		F-14405-61	114.95
71-72	(b4 72 ser#P40,001)	F-14405-62	114.95
72-74	(from 72 ser#P40,001)	F-14405-63	114.95



14474 CONNECTOR, Coil Wiring

Originals are frequently cracked or corroded to the point of causing intermittant ignition cutouts. This replacement connector can be spliced into your existing wiring to solve these problems. Connector includes 8" wire leads for splicing.

77-88 W/electronic ignition and clip on coil connector F-14474-1 9.95

MINITURE BULB

U-L37 ..... 0.70
U-L89 ..... 0.70
U-L90 ..... 1.10
U-L97 ..... 0.60
U-L97NA 1.25
U-L105 ..... 1.25
U-L161 ..... 0.70
U-L168 ..... 0.55
U-L194 ..... 0.45
U-L194LL 0.80
U-L194NA, pair 2.50
U-L198 ..... 1.15
U-L212-2 ..... 1.15
U-L293 ..... 0.70
U-L561 ..... 1.11
U-L631 ..... 1.40
U-L906 ..... 0.95
U-L912 ..... 0.95
U-L916 ..... 0.99
U-L921 ..... 1.65
U-L922 ..... 0.90
U-L1156 ..... 0.75
U-L1157* 0.55
U-L1157HA* pair 15.95
U-L1157A 2.15
U-L1157NA 1.65
U-L1178 ..... 1.40
U-L1445 ..... 0.85
U-L1891 ..... 0.55
U-L1892 ..... 1.10
U-L1893 ..... 0.55
U-L1895 ..... 0.55
U-L3156 ..... 1.90
U-L3157 ..... 1.05
U-L3157-SA 1.65
U-LH2 ..... 6.55
U-LH3 ..... 5.25

MINITURE BULB APPLICATIONS

Year	Parking	Turn Signal	Side Marker	Cornering	Fog	Roof Marker	Interior	Courtesy, Cargo, Map, Eng., Etc.	Tail	High Mount	Stop	Turn Signal	Side Marker	License	Back Up
96-92	3157,916	3157	194A	3156	H3	194			3157	921,922	3157	3156,3157	194	97,194	1156,3156
91-90	3157	3157	194	1156	H2,H3	194			3157	3157	3157	3156,3157	194	97,194	1156,3156
89-88	3157,3157SA	3157,3157SA	3157,3157SA	1156	H3	168			3157,3157SA	3157,3157SA	3157,3157SA	3157	194	97,194	1156
87	1157	1157	194	1156	H3	168			1157	1157	1157	1157	194	97,194	1156
86-82	1157	1157	194	1156	H2,H3	168			1157	1157	1157	1157	194	97,194	1156
81	1157NA	1157NA	194	1156	H3	168			1157		1157	1157	194	97,194	1156
80	1157	1157	194	1156	H3	168			1157		1157	1157	194	97,194	1156
1980-89 interior/courtesy bulbs include: 37, 89, 90, 97NA, 105, 161, 194, 906, 912, 1445, 1891, 1892, 1895. 1990-96 include: 37, 90, 105, 161, 168, 194, 561, 906, 912, 1892.															
79	1157	1157	168,194	1156	H3		89,161,194 1445,1891 1892,1893	105	1157		1157	1157	1895	97,194	1156
78	198	1157NA	168	194	H3		89,161,194 1445,1891 1892,1893	105	1157		1157	1157	194	97,194	1156
77-75	198	198	194				194,293 1445,1895	89,212-2 631	1157		1157	1157	194	1178	1156
74-73	1157	1157	194				1893,1895	631	1157		1157	1157	194	1178,97	1156
72-71	1157	1157	194				1895,1892	631,105	1157		1157	1157	194	97	1156
70-69	1157	1157	194				1895,1892	631,105	1157		1157	1157	194	1178	1156
68-66	1157A	1157A					1895	631	1157		1157	1157,1157A		1178	1156

NOTE: Bulb numbers listed together are optional bulbs, verify the number on the bulb base or in the owners manual to order the correct number

LIGHTING SECTION INFORMATION

Miniture bulb .....pg 93
Parking light.....pg 95
Back up light.....pg 96
Driving/fog lights .....pg 96
Marker light.....pg 97
Tail light 1966-77 .....pg 98
Tail light 1980-96 .....pg 99
Courtesy/cargo light pg 100
Head light ..... pg 93
Turn signal..... pg 95
Running lights-cab .... pg 96
Running lights-body .. pg 97
Tail light general ..... pg 98
Tail light 1978-79..... pg 99
License light ..... pg 99

Some abbreviations found in this section (alphabetical-read across):

amp .....Amperes
ctrl..control (speed control)
incl ..... includes
OE Original equipment style
pc (s).....Piece (s)
Replacement ..... reqd
reqs ..... Requires
ser# ..... serial number
W/o.....Used without
following a number (8500#= 8500 pounds)
chrg... charge (core charge)
excl ..... excludes
LH..... drivers side
opt. .....Option (al)
Repl'mt .....
Required.....
RH ..... passenger side
w/.....Used with
#.....pounds-when used

A complete listing of abbreviations may be found at the rear of this catalog.

HEAD LIGHT

BULB, Headlight by Wagner Lighting

Wagner "Brite-lites™" are improved designs from standard and feature a 55 watt lo-beam filament for 80% more on the road light. LazerBlue® Xenon bulbs give an even brighter white light from a brilliant blue coating. Enhanced reflection on road signs, reduces driver fatigue & gives a brighter, whiter light than halogens. Wagner Halogen Gold's have a limited lifetime warranty.



Round bulb:

66-78 "6012, 6014", replacement 13007-1 5.20
66-78 "H6024", halogen, BriteLite" .. 13007-1B 14.35



Rectangular bulb:

78-80 "6052", replacement C-2727-110B 8.70
78-86 "H6054", halogen, replaces 6052 ..... F-13007-6H 13.75
78-86 "Brite-lite™", 6052..... F-13007-6B 19.65
78-86 "H6054", "LazerBlue™", replaces 6052 ..... F-13007-6LB 23.75



Capsule:

87-91 Replacement, 9004 ..... F-13N021-1 5.45
87-91 "Brite-lite™", 9004..... F-13N021-1A 5.99
87-91 "LazerBlue®", 9004 ..... F-13N021-1LB 9.25
92-96 Replacement, 9007 ..... F-13N021-2 8.75
92-96 "Brite-lite™", 9007..... F-13N021-2A 9.85
92-96 Halogen "Gold", 9007 ..... F-13N021-2B 10.10
92-96 "LazerBlue®", 9007 ..... F-13N021-2LB 12.35



Lens Restoration Kit

Restores clouded, pitted and yellowed plastic lenses, easy 3 step process is quick and very effective, easy to follow instructions

87-96 ..... 909-6A 16.95



TRI-BAR HALOGEN, Headlight Bulb

All glass with chrome Tri-bar design. Highly polished interior surface teamed with special halogen H4 bulbs produce a bright, clear and wide beam pattern. Lights on or off – the look is totally custom! H4 bulbs included. Not DOT approved. 12 volt

66-78 Round bulb, pair 13007-4A 168.95



XENON CONVERSION, Headlight Bulb

Do away with that standard bulb and the hassles involved in changing them when one burns out. This capsule utilizes the powerful Xenon H4 bulb in a glass lens and metal body with custom faceted reflector design. Far brighter and whiter than halogen bulbs. Not DOT approved but meets European standards. 12 volt.

66-78 Round bulb, pair 13007-4C 75.95
Replacement xenon bulb, 60/55 watt.. U-LH4A 4.95
Replacement xenon bulb, 100/80 watt, check local laws on use!..... U-LH4B 6.95



BULB, LED

Interior

75-77 Low heat and brighter than standard bulb U-L212-2L8 4.50

Exterior

White, single diode, brighter than standard bulb

69-87 Side marker..... U-L194LE 5.50
78-96 License..... U-L194LE 5.50
90-91 Side marker..... U-L194LE 5.50

30 diodes, low heat, requires the use of an electronic flasher unit for both the turn signal and emergency flasher circuits

81 Amber U-L1157AL 9.75

30 diodes, single contact, 1" diameter, white LED can be used behind any color lens

66-96 White..... U-L1156L30 9.75

A 13007 Head light body/lens
B 13008 Head light assy
C 13N019 Retainer, encapsulated bulb
D 13N021 Encapsulated bulb, head light
E 13032 Screw, head light adjusting
F 13K040 Screw, head light adjusting
G 13200 Parking lamp
H U-L Miniature bulb
Items in blue-check listings for applications.

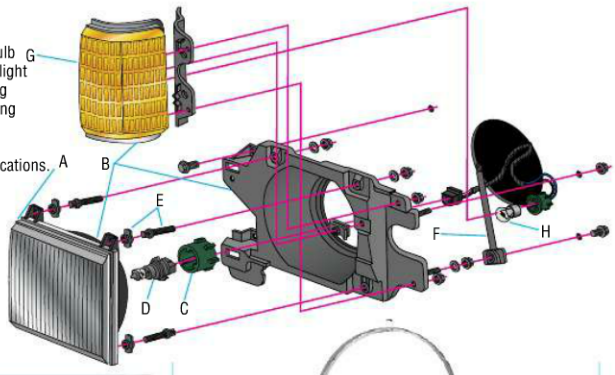

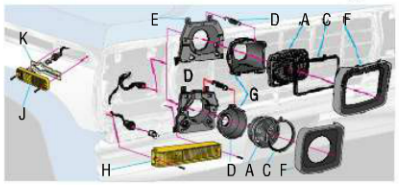

A 13007 Head light
B 13008 Head light housing
C 13015 Retainer ring
D 13031 Adjusting spring
E 13032 Adjusting screw/nut
F 13064 Trim bezel
G 13118 Bulb bucket
H 13200 Parking light
J 15A201 Side marker light
K 15A447 Marker light gasket
Items in blue-check listings for applications.

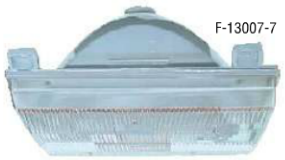

13007 HEAD LIGHT BODY and LENS ASSY

87-91	RH, w/black and chrome trim	F-13007-9	300.00
87-91	LH, w/black and chrome trim	F-13007-10	300.00
89-91	RH, w/o black and chrome trim	F-13007-7	150.00
89-91	LH, w/o black and chrome trim	F-13007-8	104.10
92-96	RH, excl NITE	F-13007-13	91.42
92-96	LH, excl NITE	F-13007-14	81.85



13008 HEAD LIGHT ASSY

NEW! 80-86	LH, original, limited availability	F-13008-7	78.95
NEW! 80-86	RH, original, limited availability	F-13008-6	78.95
87-91	LH, incl park lamp, w/black and chrome trim, exc. Nite, original	F-13008-9	450.00
89-91	RH, incl park lamp, w/o black and chrome trim, original	F-13008-10	230.00
92-96	RH, original	F-13008-12	158.67
92-96	RH, repro	F-13008-12A	65.95
92-96	LH, original	F-13008-13	158.67
92-96	LH, repro	F-13008-13A	65.95



13015 RING, Head Light Retaining

66-78	Stainless, original, 2 reqd	13015-1	25.18
66-78	Stainless, repro, 2 reqd	13015-1A	7.50
66-78	W/round head lights, repro, perfect fit, original mounting tab design & fits better than other repro	13015-1B	9.50

13015 MOUNTING KIT, Head Light Adjusting Ring

66-78	Round head lights only	13015-1K	1.50



13N019 RETAINER, Head Light Bulb

87-91		F-13N019-1	9.45
92-96		F-13N019-2	4.05



13A024 SWITCH ASSY., Head Light Dimmer

66-89		13A024-1	7.95



13031 SPRING, Head Light Ring Adjustment

66-68		F-13031-6	2.00
NEW! 69-77		13031-1	1.99
80-86		F-13031-4	6.08

13032/13K040 SCREW & NUT, Head Light Adjusting



66-74	Screw, 4 reqd	13032-2	0.99
66-67	Replacement, screw & nut, white nylon, 4 reqd	13032-1	3.00
68-77	Screw and nut, white nylon, 4 reqd	13032-1	3.00



78-86	W/rectangular head lights, screw and nut, 4 reqd	F-13032-12	2.00
87-91	Upper, screw and nut, 4 reqd	F-13032-8	1.10



87-91	Lower, screw only, 2 reqd	F-13032-9	2.93
92-96	Adjustable arm	F-13K040-3	15.20



94-96	Long, upper, 1 reqd, screw only	F-13032-10	1.99
94-96	Short, lower, 1 reqd, screw only	F-13032-11	1.99

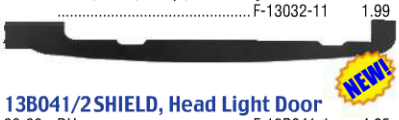

13B041/2 SHIELD, Head Light Door

80-86	RH	F-13B041-1	4.95
80-86	LH	F-13B042-1	4.95



13118 BUCKET, Head Light Bulb

66-77	Black, fits RH or LH	F-13118-1	19.95



13B159 SPLASH SHIELDS, Head Light Bucket

66-77	Pair	F-13B159-1	5.95



13533 CAP, Head Light Dimmer Switch

66-89		13533-1	5.25
90-91	W/floor mounted switch	13533-1	5.25

PARKING/TURN SIGNALS

13200 PARKING LIGHT ASSY.

F-13200-11



78-79	RH, original	F-13200-11	99.95
78-79	RH, repro, amber	F-13200-11A	53.95
78-79	LH, original	F-13201-3	99.95
78-79	LH, repro, amber	F-13201-3A	53.95



80-81	(b4 12/80), clear lens, w/locating pin, original	F-13200-12	35.72
80-81	(b4 12/80), clear lens, w/locating pin, repro	F-13200-12A	24.50



81-86	(from 12/80), amber lens, w/locating pin, original	F-13200-13	40.00
81-86	(from 12/80), amber lens, w/locating pin, repro	F-13200-13A	10.95

F-13200-15A



NEW! 91	RH, original, black trim	F-13200-24	87.50
87-91	RH, w/black and chrome trim, original	F-13200-15	148.95
87-91	RH, w/black and chrome trim, repro	F-13200-15A	39.95
87-91	LH, w/black and chrome trim, original	F-13201-15	200.00
87-91	LH, w/black and chrome trim, repro	F-13201-15A	39.95



89-91	RH, w/o black and chrome trim, original	F-13200-14	82.37
89-91	RH, w/o black and chrome trim, repro	F-13200-14A	26.95
89-91	LH, w/o black and chrome trim, original	F-13201-14	76.92
89-91	LH, w/o black and chrome trim, repro	F-13201-14A	26.95

F-13200-19



92-96	RH, original	F-13200-19	83.50
92-96	RH, repro	F-13200-19A	46.95
92-96	LH, original	F-13201-19	83.50
92-96	LH, repro	F-13201-19A	46.95

F-13200-16



66-68	RH/LH, clear lens, w/o turn signals	F-13201-16	39.95
69-77	RH/LH, amber lens, original Ford tooling	F-13200-16	39.95

13208 LENS, Parking Light

Sold each unless noted.



11 11A

66-68	Clear	F-13208-11	6.50
66-68	Amber	F-13208-11A	6.50



69-77	Amber	F-13208-7	8.95



13211 GASKET, Parking Light Lens

66-68	Pair	F-13211-12	4.95
69-77	Pair	F-13211-6A	4.95



13217 PAD, Parking Light

69-77	Repro, each	F-13217-2A	9.95

13234 SOCKET & WIRE, Repair

78-79	Parking light	F-13234-8	7.95

TURN SIGNAL/EMERG'Y FLASHER

9A389 BEZEL, Emergency Flasher

68-77	Emergency flasher	F-9A389-1	7.50

10852 BEZEL, Emergency Flasher

68-77		F-10852-16A	14.95



13305 LEVER, Turn Signal

67-77	Original style	13305-2A	8.50
NEW! 67-77	Original style, repro, custom satin chrome finish	13305-2B	12.75
78-91		F-13305-2	16.38



13305 KNOB, Turn Signal Handle

66	Push on	F-13305-4	4.50



13341 SWITCH ASSY, Turn Signal

See 13K359 for 1992-96. Original unless noted otherwise.

66-70	(b4 70 ser#50,001), repro	13341-2A	21.95
66-70	(b4 70 ser#50,001), OE tooling	13341-2B	69.95
74-77	M/T	F-13341-7	96.00
74-77	M/T, repro	F-13341-7A	49.95
74-77	A/T	F-13341-8	69.98
74-77	A/T, repro	F-13341-8A	49.95
78-79	Tilt column	F-13341-10	149.95
78-79	A/T, fixed column	F-13341-11	110.00
78-79	M/T, fixed column	F-13341-12	133.95
80-83	Fixed column	F-13341-13	87.00
80-83	Tilt column	F-13341-14	160.00
84	Fixed column	F-13341-15	200.00
85-86	Fixed column	F-13341-16	88.98
87-91	Fixed column	F-13341-17	91.98
84	Tilt column	F-13341-18	200.00
85-86	Tilt column	F-13341-19	114.00
87-91	Tilt column	F-13341-20	103.98



13K359SWITCH ASSY., Turn Signal & Wipers

92-96	W/o electronic flasher, orig.	F-13K359-1	136.50



13350 FLASHER ASSY, Turn Signal and/or Emergency Lamp

66-96	12v, turn signal or emergency flasher	13350-3	2.95

13350 ELECTRONIC FLASHER UNIT

Super heavy duty fully electronic version.

66-96	Replaces #552 flasher unit	13350-4	14.95

2 prong, 12v, use on turn signals or emergency flashers when using LED's in the tail lights or parking light sockets, normal flashers will not work with LED's as the current draw is too low to operate the flasher unit, electronic flashers only sense the current to operate not the amount of current, replaces 224, 323, 552 flasher units

NEW! 66-96		13350-6	9.25



17513 KNOB, Emergency Flasher Switch

66 Black w/white center, correct style, repro F-17513-4A 9.95
67-79 Original F-17513-6 40.88
67-79 Repro F-17513-6A 12.50

BACK UP LIGHTS



15520 BRACKET & SWITCH ASSY, Back Up Lamp

67-77 M/T F-15520-1* 36.95
78-79 M/T F-15520-3 23.95
80-89 M/T, excl 3sM/T & 4sM/T-OD. F-15520-3 23.95
81-83 4sM/T OD F-15520-7 22.95
NEW! 86-89 4sM/T, replacement F-15520-3A 25.50
NEW! 90-96 Repleacement F-15520-3A 25.50

It may be necessary to ream switch mounting hole in existing backup switch mounting bracket to accommodate switch diameter.

RUNNING LIGHTS-CAB ROOF



15445 RUNNING LIGHT KIT, Cab Roof

Amber, 5 deluxe die-cast lights, chrome base, 8"l x 2 1/2"w x 2 1/2"h F-15445-1 74.95
Replacement single lamp for above F-15445-1A 14.95
Amber, tear drop w/paintable bases, set of 5, plastic, 4 5/8"l x 2 1/16"w F-15445-2 38.75
Replacement single lamp for above F-15445-2A 8.25

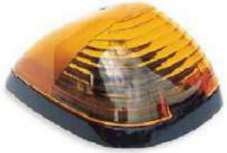

Amber, tear drop, plastic, 4"l x 36"w x 1 3/4" h, sets includes wiring

OE style, Set 5 ..... F-15445-3 59.95
Each F-15445-3A 11.95

DRIVING/FOG LIGHTS

A 15K233 Cover, fog light
B 13466 Bulb, fog light
B U-LH Bulb, fog light
C 15200 Fog light assy
D 15L203 Lens, fog light
E 15A245 Bezel, fog lamp
Items in blue -check listing for applications

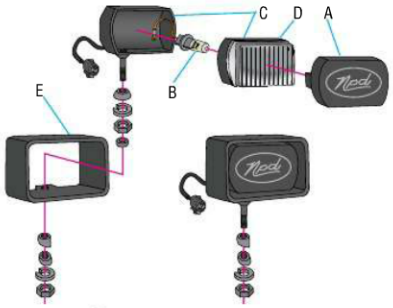



15200 FOG LAMP, Original

88-94 Bosch fog lamp, each F-15200-2 221.20



15L203 FOG LAMP LENS, Original

88-94 Bosch fog lamp F-15L203-2 48.90



13466 REPLACEMENT BULB, Fog Lamp

80-96 55w, H2 halogen bulb, for factory installed fog lamps, see also miniture bulb section for other options U-LH2 6.55



15A214 SWITCH, Fog Lamp

88-96 Bosch fog lamp F-15A214-2 50.00

KC HiLiTES



LONG RANGE, KC Off Road

Rectangular long range lights feature super bright quartz halogen bulbs that project up to 1 1/2 miles!
•Glass lenses for maximum clarity and projection
•55 watt bulbs create 90,000 candlepower, 100 watt 5x7" lights create 167,000 candlepower and the extra large 6 x 9" 100 watt lights create a bright 191,000 candlepower!

Black plastic 55w, 5x7" hsg F-15200-40 38.50
Set of above F-15200-40K 114.50
Chrome 100w, 5x7" hsg F-15200-41 51.25
Set of above F-15200-41K 134.95
Black chrome 100w, 5x7" hsg F-15200-42 51.25
Set of above F-15200-42K 134.95
Stainless steel 100w, 5x7" hsg F-15200-43 58.50
Set of above F-15200-43K 165.95
Chrome 100w, 6x9" hsg F-15200-44 88.50
Set of above F-15200-44K 194.95
Black painted 100w, 6x9" hsg F-15200-45 81.75
Set of above F-15200-45K 179.95



DAYLIGHTER, KC Off Road



The most recognized and asked for name in off road lighting. In the highly competitive world of off road racing, KC has illuminated the way for more winning vehicles than all other brands combined. KC offers the most powerful and complete range of lights available for offroad and long range visibility applications.

ORIGINAL 6" ROUND

•150 watt lights, minimum of 385,000 candlepower!
•100 watt lights 200,000 candlepower.
•Rubber bushed mounts to insulate light from vibration.
•Rugged good looking flex-tube wire lead sheathing.
•Kits include 2 lamps, 2 covers and electrical install kit.
•Consider the optional relay wiring kit sold separately (heading 15237).

Chrome 100w, clear lens, each F-15200-30 67.75
Set of above F-15200-30K 147.95
Chrome 130w, clear lens F-15200-31 62.95
Set of above F-15200-31K 129.95
Black painted 100w, clear lens F-15200-32 67.75
Set of above F-15200-32K 147.95
Black painted 130w, clear lens F-15200-33 62.95
Set of above F-15200-33K 129.95
Stainless steel 100w, clear lens F-15200-34 85.50
Set of above F-15200-34K 183.95
Stainless steel 130w, clear lens F-15200-35 76.95
Set of above F-15200-35K 162.95



ALL SEASON 57 SERIES, KC

Rectangular 5 x 7" KC Fog Lights throw a wide beam of light under fog and foul weather, illuminating the road ahead. They also serve to increase visibility in snow, sleet, rain and dust! Includes both amber and clear lenses.

- ***Lenses are made of virtually unbreakable Lexan® polycarbonate.***
- ***55 watt Quartz halogen bulb.***
- ***7,500 amber and 15,000 clear lens candlepower!***
- ***Kits include 2 lamps, 2 covers, 4 lenses and electrical installation kit.***
- ***Durable rubber boot covers 2 axis mounting brackets.***
- ***AAMVA approved***

Black plastic hsg, clear/amber	F-15200-12K	134.95
Black chrome hsg, clear/amber	F-15200-13K	151.95
Stainless steel hsg, clear/amber	F-15200-10K	179.95
Chrome hsg, clear/amber	F-15200-11K	151.95



FOG LAMP KIT, KC Sport Series

Unique "stick-on" adhesive mounting system for permanent installation without drilling holes. Works great with accessory air dams!

- ***Includes both amber and clear lenses***
- ***6,500 amber and 42,000 clear lens candlepower.***
- ***55 watt Quartz halogen bulbs***
- ***Unique mounting system, plus traditional bolt-on mounting parts.***
- ***Kits include 2 lamps, 4 lenses, 2 covers and electrical installation kit***

Rectangular black composite hsg, 2x6", kit	F-15200-18	128.95



15237 LIGHT HARNESS, KC HiLiter

Each harness will operate two front end, roof or bar mounted lights, they provide a factory installed appearance and include a 40 amp HD relay

	F-15237-1	60.75

15A211 SWITCH & WIRING KIT, KC HiLiter

For 2 lights w/full size switch	F-15A211-1	18.95
For 4 lights w/full size switch	F-15A211-2	32.50
For 2 lights w/mini size switch	F-15A211-3	18.75

13A016 ROCK SHIELD, KC DayLighter

6" round for KC DayLighter lamps, pair	F-13A015-10B	27.95



6" round, ABS plastic, sold each

Black	F-13A015-10D	15.75
Chrome	F-13A015-10E	18.75
White	F-13A015-10F	15.75
Yellow	F-13A015-10G	15.75

15K233COVER, KC HILITER Soft Vinyl

Vinyl covers sold in pairs only.



6" round, black KC on yellow	F-15K233-10	16.25
6" round, white KC on black	F-15K233-11	16.25
6" round, black KC DayLighter shades on yellow	F-15K233-14	16.25



6" round, red KC brush on black	F-15K233-31	16.25
6" round, white KC brush on black	F-15K233-34	16.25
5x7" rectangular, red KC brush on black	F-15K233-32	16.25
6x9" rectangular, red KC brush on black	F-15K233-33	19.50

Hard plastic covers sold as each.



6" round, black KC on white	F-15K233-21	8.95
6" round, black KC DayLighter on yellow	F-15K233-15	9.75
5x7" rectangular, white KC on black	F-15K233-27	9.75



13466 REPLACEMENT BULB, KC

H3 55w halogen, standard	U-LH3	5.25
H3 55w halogen, LazerBlue®	U-LH3LB	6.99
H3 100w halogen	F-13466-2767	8.25
130w 6" round sealed beam	F-13466-2627	22.75

15L203 REPLACEMENT LENS, KC

6" round, clear, glass, long range	F-15L203-213	25.75
6x9" rectangular, clear, glass, long range	F-15L203-214	27.95
5x7" rectangular, clear, lexan®, fog	F-15L203-530	9.50
5x7" rectangular, amber, lexan®, fog	F-15L203-531	9.50
5x7" rectangular, amber, lexan®, driving	F-15L203-537	9.50
5x7" rectangular, clear, lexan®, long range	F-15L203-538	8.50
5x7" rectangular, clear, glass, long range	F-15L203-539	11.50
2x6" rectangular, clear, glass, fog	F-15L203-630	9.50
2x6" rectangular, amber, glass, fog	F-15L203-631	9.50
2x6" rectangular, clear, glass, competition	F-15L203-639	9.50

RUNNING LIGHTS-BODY SIDE

15442 RUNNING LIGHT KIT, Accessory

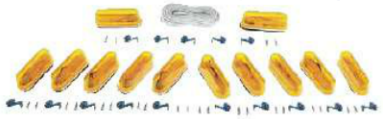

Great for running boards or side body, set of 12 lights, w/ wiring

Amber	F-15442-1	42.50



Tailgate. Set of 5 red lights w/wiring, hidden screw mtg and neoprene gaskets for clean trouble free installation

Red	F-15442-2	31.50

MARKER LIGHT

13380 REFLECTOR ASSY, Body



67-69	Grille, amber, original Ford tooling	F-13380-1	25.00
67	Ft fender, amber, original Ford tooling	F-13380-1	25.00
67-69	Red, body side rear, original Ford tooling	F-13380-2	25.00



68-69	RH, amber, ft fender, original Ford tooling	F-13380-9	30.00
68-69	LH, amber, ft fender, original Ford tooling	F-13380-10	30.00
68-69	RH, body side, red, original Ford tooling	F-13380-3	30.00
68-69	LH, body side, red, original Ford tooling	F-13380-4	30.00



70-77	Sport, RH, rear, red, w/bezel, original Ford tooling	F-13380-7	35.00
70-77	Sport, LH, rear, red, w/bezel, original Ford tooling	F-13380-8	35.00



13A493 GASKET, Body Reflector

68-69	Body side, RH, repro	F-13A493-1	15.00
68-69	Body side, LH, repro	F-13A493-2	15.00

15A201 MARKER LIGHT ASSY





70-77	Front fender, amber, repro	F-15A201-1A	9.95
70-77	Body side, rear, red, original	F-15A201-2	26.97
70-77	Body side, rear, red, repro	F-15A201-2A	9.95

Above Bronco 70-77 marker lamps are replacements for 70-72, correct for 73-77.





78-79	Front fender, amber, original	F-15A201-3	15.10
78-79	Front fender, amber, repro	F-15A201-3A	11.95
78-79	Body side rear, red, original	F-15A201-4	15.02

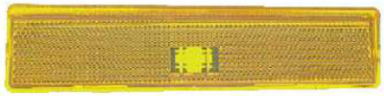

80-86	RH, front fender, amber	F-15A201-5	17.98
80-86	RH, front fender, amber, repro	F-15A201-5A	7.50
80-86	LH, front fender, amber, repro	F-15A201-6A	7.50



92-96	RH, front fender, amber	F-15A201-7	26.97
92-96	RH, front fender, amber, repro	F-15A201-7A	14.95
92-96	LH, front fender, amber	F-15A201-8	26.67
92-96	LH, front fender, amber, repro	F-15A201-8A	14.95



15A460 BEZEL & PLATE, Side Light

Front or rear, repro, remove gasket for rear use.

70-77	Repro, each, best repro	F-15A460-1	42.95
70-77	Repro, each, good repro	F-15A460-1A	23.95
70-77	Repro, each, repro, stainless steel	F-15A460-1B	49.95

15A434 SOCKET & WIRE, Marker Light

70-79	Front or rear side marker lights, replacement, 12" repair lead	15A434-1A	4.95

TAIL LIGHT



BULB, Halogen Tail Light

Halogen bulb is 333% brighter on running light and 156% brighter on stoplight.

66-87	Replaces any #1157 bulb, 10/50cp, pair	U-L1157HA	15.95



LED Tail Light/Running Light Bulbs

Running Lights

Replaces 1156 bulb

White, 12 diodes, single contact, 1" dia.		U-L1156L12	30.95

Replaces 3156 bulb

White, 5 square diodes, wedge base, 1" dia.		U-L3156L5	31.95
Amber, 19 diodes, wedge base, 1" dia.		U-L3156L9A	9.95

Tail Lights

Replaces 1157 bulb

Red, 12 diodes, dual contact, 1" dia.		U-L1157L12	11.95
Red, 24 diodes, dual contact, 1 3/4" dia		U-L1157L24	18.95
Red, 36 diodes, dual contact, 2 3/16" dia.		U-L1157L36	33.95

Replaces 3157 bulb

White, 5 square diodes, wedge base, 1" dia.		U-L3157L5	33.95

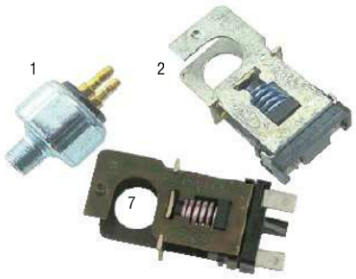

13480 SWITCH ASSY, Brake Light

66		F-13480-1	4.95
67-77		F-13480-2	12.50
78	(b4 ser#CC0,001), on brake pedal arm, replacement	F-13480-5	6.95
78-79	(from 78 ser#CC0,001), on brk pedal arm	F-13480-5	6.95
80-82	MB	F-13480-7A	20.25
80-85	PB	F-13480-7A	20.25
86-89		F-13480-10	17.25
90-93	Motorcraft	F-13480-7	16.95
90-93	Replacement	F-13480-7A	20.25
94-96	Motorcraft	F-13480-9	21.95
94-96	Replacement	F-13480-10	17.25

TAIL LIGHT 1966-77

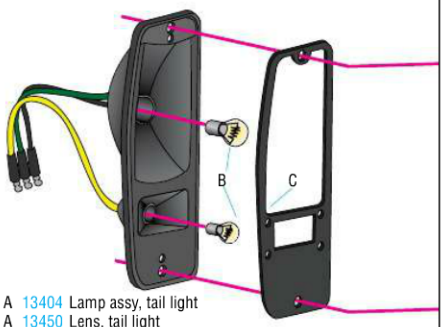

A 13404 Lamp assy, tail light
A 13450 Lens, tail light
B 13465 Bulb
C 13461 Gasket, tail light lens
D 13489 Door, tail light
D 279A66 Door, tail light
Items in blue-check listings for applications.



13450/1 LENS, Tail Light

66	RH, original	F-13450-8	14.95
66	LH, original	F-13451-8	14.95
67-77	RH, original Ford tooling	F-13450-9	20.00
67-77	RH, repro	F-13450-9A	12.95
67-77	LH, original Ford tooling	F-13450-10	20.00
67-77	LH, repro	F-13450-10A	12.95

13461 GASKET, Tail Light Lens

66-77	Pair	F-13461-3	7.95

13489 DOOR, Tail Light

66-77	RH, original Ford tooling	F-13489-1	39.95
66-77	RH, good repro	F-13489-1A	39.95
66-77	LH, original Ford tooling	F-13489-2	39.95

Best repro, designed with super smooth finish in highly polished stainless steel:

66-77	Pair	F-13489-1B	59.95



378996 GROMMET, Tail Light Wiring

66-77	2 reqd	378996-S	1.50

TAIL LIGHT 1978-79

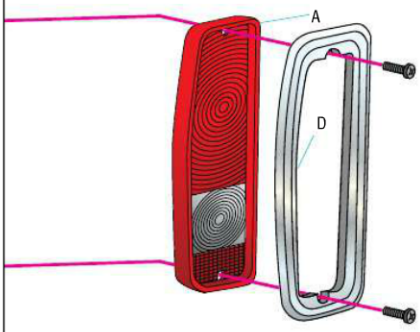



13404/5 LIGHT ASSY., Rear

78-79	RH, original	F-13404-6	17.62
78-79	RH, repro	F-13404-6A	19.95
78-79	LH, repro	F-13405-6A	19.95

13234 SOCKET & WIRE, Repair

78-79	Tail light, replacement	F-13234-8	7.95

A 13380 Reflector, body side
B 13404 Tail light assy
C 13434 Housing, tail light
D 13450 Lens, tail light
E 13461 Gasket, Tail light lens
F 13465 Bulb
G 13489 Door, tail light
H 13A493 Gasket, reflector
J 13550 Lamp assy, license
K 13564 Lens, license light
L 15A201 Marker lamp, side
M 15A460 Bezel, side marker light
N 279A66 Door, tail light
O 15A434 Socket, marker light
Items in blue -check listing for applications

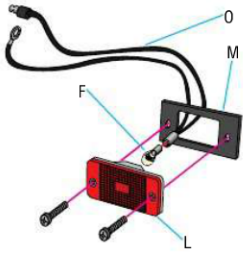

TAIL LIGHT 1980-96

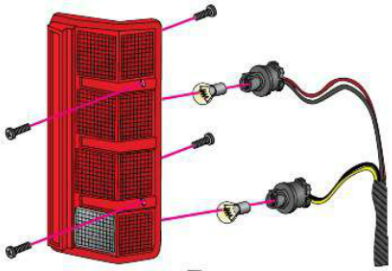



13404/13405 LIGHT ASSY., Rear

80-86	RH, S/side, original	F-13404-8	77.48
80-86	RH, S/side, repro	F-13404-8A	20.60
80-86	LH, S/side, original	F-13405-8	70.90
80-86	LH, S/side, repro	F-13405-8A	20.60
87-90	(b4 10/89), S/side, RH, original	F-13404-9	80.80
87-90	(b4 10/89), S/side, RH, repro.	F-13404-9A	24.25
87-90	(b4 10/89), S/side, LH, repro .	F-13405-9A	24.25
90-96	(from 10/89), S/side, RH, original	F-13404-11	43.10
90-96	(from 10/89), S/side, RH, repro	F-13404-11A	34.95
90-96	(from 10/89), S/side, LH, original	F-13405-11	43.15
90-96	(from 10/89), S/side, LH, repro	F-13405-11A	34.95



13404/5 BODY ASSY, Rear Light, Custom

Custom designed clear and red lens for an extreme look.

90-96	S/side, pair	F-13404-11C	106.95

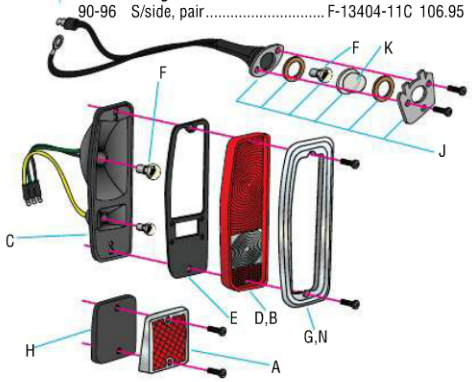

LICENSE LIGHT

A 13406 Bracket, license light
B 13445 Lens, license light
C 13447 Gasket, license lens
D 13550 Lamp assy, license
E 13564 Lens, license light
F 13568 Gasket, license light

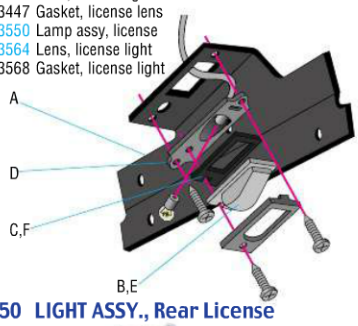

13550 LIGHT ASSY., Rear License



66-77		F-13550-13	42.50



80-96	W/painted or step bumper	F-13550-9	9.05
NEW! 80-96	W/chrome bumper	F-13550-6	10.47
94-96	W/black bumper	F-13550-11	6.75

13564 LENS, Rear License Light



66-77	Glass, original Ford tooling	F-13564-1	10.00
78-79	W/chrome bumper	F-13564-6	12.50
78-79	W/chrome bumper, original, limited NOS stock availability	F-13564-6A	17.95



353789 GROMMET, License Light Wiring

66-77	On tailgate	353789-S	1.00



13422 FRAME, License Plate

66-77	On tailgate, polished stainless steel, repro	F-13422-1A	49.95

COURTESY/CARGO LIGHT



13713 SWITCH ASSY., Courtesy Light

66-67	Exactly as original, correct shaped plastic plunger and metal ring, correct coloring too.	13713-1	6.25
67	W/5/32" terminal connectors, repro, black plastic plunger and white body	13713-5AA	2.75
67	Exactly as original,	13713-5A	5.95
67	As above but with chrome body and black plunger, custom look, pair	13713-5B	13.95
67-72	Exactly as original, Autolite logo	13713-5C	6.75
67-72	As above but with chrome body, custom look, Autolite logo, pair	13713-5D	15.95
68-77	Original replacement	F-13713-5	6.00
78-96	At A pillar	F-13713-2	8.95
80-89		F-13713-6	9.95
92-93	RH door at B pillar	F-13713-2	8.95
92-93	LH door at B pillar	F-13713-7	29.18
94-96	At B pillar	F-13713-7	29.18

13C775 BOOT, Courtesy Light Switch

78-96	Use on F-13713-2	F-13C775-1	5.40



13776 LIGHT ASSY, Courtesy

79	Dome/map	F-13776-6	75.33
80-89	W/o headliner, dome, original	F-13776-3	40.00
NEW! 80-89	W/o headliner, dome, repro	F-13776-3A	24.95
90	Dome/map	F-13776-6	75.33
94-96	In overhead console	F-13776-13	91.17
95-96	dome	F-13776-16	43.87
96	(from 11/96), w/headliner mounted console, w/o interior light group	F-13776-18	59.95

13783 LENS, Dome Light



79	Dome light, original	13783-4	4.60
NEW! 79	Dome light, replacement, lens color is not pure white	13783-4A	2.95
80-96	Dome, clear, original	F-13783-8	3.89
80-96	Dome, clear, replacement	F-13783-8A	3.50



95-96	In overhead console	F-13783-12	13.93



15550 UTILITY LIGHT ASSY., Rear

80-89	Chrome, kit	F-15550-1	149.95

HORN



13832/3 HORN

66-96	12v, Classic "OOOGAH!"	F-13832-4	49.95
66-86	High pitch, replacement	F-13832-1	22.95
66-86	Low pitch, replacement	F-13833-1	22.95
66-86	High pitch, "Freeway Blaster" replacement	F-13832-1	22.95
66-86	Low pitch, "Freeway Blaster" replacement	F-13833-1	22.95
87-96	W/Dual note-high and low pitch horn, replaces single horn, reqs F-13832-2B	F-13832-2A	48.63
87-96	W/Dual note-high and low pitch horn, replaces single horn, reqs F-13832-2A	F-13832-2B	44.78



13853 RELAY, Horn

74-77		F-13853-5	19.95
78-86	W/speed control	F-13853-5	19.95
87-88	W/speed control	F-13853-6	25.95
89-91		F-13853-6	25.95
92-96		F-13853-6	25.95

WIPER



10852 BEZEL, Wiper

69-72	Wiper switch, chrome w/black lettering	F-10852-12	14.95
73-77	Wiper switch	F-10852-14A	14.95

17A475 SEAL, Wiper Pivot Shaft

78-79	Set, repro, to cowl	F-17A475-2A	9.95



17C476 GOVERNOR, Intermittent Wiper Control

90-91		F-17C476-4	99.95
92-96		F-17C476-5	117.95



17508 MOTOR, Windshield Wiper

Note core charges for each rebuilt motor ordered.

66-77	2 spd electric-correct for 69-77, 66-68 must be converted to electric using later parts, rebuilt, core chrg $80	17508-03	72.95
78-79	Original Ford, limited supply!	F-17508-11	199.95
78-79	Rebuilt, core chrg $80	F-17508-11A	67.95
80-86	Rebuilt, core chrg $80	F-17508-15	61.95
87-96	Rebuilt, 1st design with 2 wire plugs, 1 on top/1 on side of gear case, core chrg $80	F-17508-16	66.95
87-96	Rebuilt, 2nd design with single wire plug on side of gear case, core chrg $80	F-17508-17	69.95



17A511 COVER, Wiper Motor Gear

67-77		F-17A511-1	10.00

17512 BEZEL NUT, Wiper Switch

73-86	Original	F-17512-3	12.42
73-86	Repro	F-17512-3A	7.95

17513 KNOB, Windshield Wiper



69-77	W/electric wipers, wiper, orig.	F-17513-6	40.88
69-77	W/electric wipers, wiper, repro	F-17513-6A	12.50
78-79	Wiper	F-17513-7	31.14

VISA MasterCard DISCOVER AMERICAN EXPRESS WESTERN UNION QuickCollect



80-84 Wiper F-17513-8 38.62
85-93 Wiper F-17513-9 12.57
See 11500 for vacuum wiper washer pump button.



F-17514-1 F-17514-1A

17514 BEZEL, Wiper Spacer Mounting
66 ..... F-17514-1 24.95

17514/5 NUT, Wiper Spacer Mounting
66 ..... F-17514-1A 4.95
69-77 ..... F-17515-1A 5.00

17526 ARM ASSY., Windshield Wiper



78-79 Repro F-17526-4A 12.50



80-93 Original F-17526-6 53.22
80-93 Repro F-17526-6A 10.75
94-96 Original F-17526-7 30.98
94-96 Repro F-17526-7A 12.95



17528 BLADE ASSY., Wiper
66-69 W/vacuum wiper motor, 12" Trico F-17528-7 11.20
69-77 W/electric wiper motor, replm't is 11", also fits 66-68 w/factory electric conversion F-17528-11 9.55
78-79 15" F-17528-3 16.25
80 (b4 ser#HJ0,001), w/original arm, Trico 18" F-17528-5 7.40
80-93 (from 80 ser#HJ0,001), w/original arm, Tridon 18" F-17528-5 7.40
94-96 (from 1/94), original 18" Tridon style F-17528-6 8.50

17543 HOSE KIT, Windshield Washer
78-79 Incl hoses and tee F-17543-6K 8.00

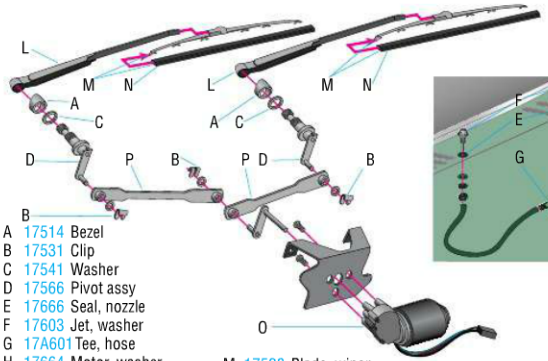

A 17514 Bezel
B 17531 Clip
C 17541 Washer
D 17566 Pivot assy
E 17666 Seal, nozzle
F 17603 Jet, washer
G 17A601 Tee, hose
H 17664 Motor, washer
J 17618 Bottle/bag, washer
K 17632 Cap, bottle/bag
L 17526 Arm, wiper
M 17528 Blade, wiper
N 17593 Refill, wiper
O 17508 Motor
P 17540 Arm, transmission
Q 17651 Bracket, washer bag
R 17543 Hose, washer
Items in blue-check listings for applications.

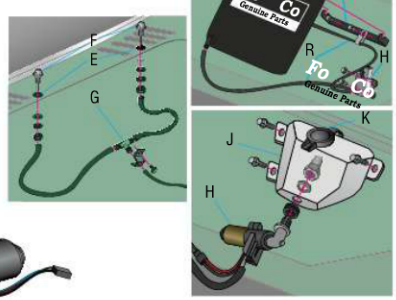



17531 CLIP, W/S Wiper Adaptor
69-77 W/2 speed electric wipers 17531-1 1.80
78-96 ..... 17531-1 1.80



17593 RUBBER REFILL, Wiper Blade
78-79 15", each F-17593-3 3.50
80-96 Tridon 18", pair 17593-3 7.40



17541 GASKET, Wiper Pivot
69-77 On windshield frame F-17541-2 3.95

17543 HOSE KIT, WINDSHIELD WASHER
78-79 Incl hoses and tee F-17543-6K 8.00

17A553 SWITCH ASSY., Electric Wiper
See 13K359 below for wiper/turn signal switch replacement.



69-77 W/2 speed electrical wipers, 7 terminals F-17A553-5 62.95
78-79 W/o intermittent wipers..... F-17A553-6 66.95



78-79 W/intermittent wipers..... F-17A553-7 108.50



80-91 W/o intermittent wipers..... F-17A553-8 54.95
80-91 W/intermittent wipers..... F-17A553-9 61.50



13K359 SWITCH ASSY., Wipers & Turn Signal
92-96 W/o electronic flasher, orig. ... F-13K359-1 136.50

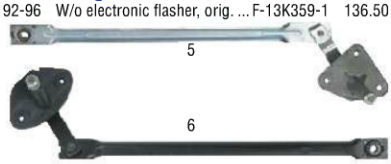

17566/7 WIPER PIVOT ASSY.
78-79 RH F-17566-5 84.95
78-79 LH F-17567-5 84.95
80-96 RH F-17566-6 17.00
80-96 LH F-17567-6 18.98



11500 SWITCH ASSY., Windshield Washer Push Button
66-69 Vacuum wipers F-11500-1 11.95



17A601 HOSE TEE, Windshield Washer
66-67 ..... 17A601-1 0.49
78-79 ..... 17A601-2 1.25



17603 JET, Windshield Washer
See 17666 for seals used with T-17666-1/1A.
66-77 Original design, each..... T-17666-1A 14.95
78-79 2 reqd, limited NOS stock availability F-17603-1 14.95
80-86 Each F-17603-2 7.49

17618 RESERVOIR, Windshield Washer



66	(b4 about 5/1/66), white print, exact repro	17618-1B	19.95
66-67	(from about 5/1/66), gold print, exact repro	17618-1	19.95
NEW! 66-67	(from 5/1/66 to before 3/1/67), repro, gold print	17618-1C	19.95



68-70	Limited NOS stock availability	F-17618-3	24.95
68-70	Repro	F-17618-3A	24.95



87-96	W/o low fluid warning switch, split style for washer and coolant	F-17618-9	46.98



17632 CAP, Windshield Washer Bag

66-67	Flip style	F-17632-2	5.00

17651 BRACKET, Washer Bag

66-67		17651-1A	5.95





17664 PUMP, Windshield Washer

66-67	Single speed wipers, exact repro	17664-1A	33.95
68-96	Motorcraft	17664-4	32.95
68-96	Replacement	17664-4A	16.95



17666 SEAL, Washer Jet

66-77	Pair, 17603 jet to body	T-17666-2	0.60

HEATER

See Weatherstrip/Rubber section for heater seals & gaskets.

01934 VENT, Air Duct

NEW! 66-77	Repro, incl hardware	F-01934-1A	49.95

01988 AIR DUCT ASSY, Upper Repair

NEW! 66-77	Simply cut off the defective top and replace it with this piece	F-01988-2A	19.95

02824 SEAL, Cowl Top Panel

NEW! 87-91	To hood	F-02824-2	46.90

18A318MOTOR, Vacuum Control

NEW! 88-91	Vacuum control motor w/ 2 positions, limited availability	F-18A318-8	14.95

18457 INLET DUCT, Heater Air

66-77	RH, on top of cowl	F-18457-1	89.95



18472 HEATER HOSE

66-94	5/8" I.D., sold per foot	N18472-1	1.35
66-92	3/4" I.D., sold per foot	F-18472-2	1.75

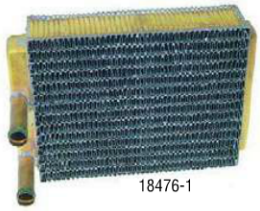

18476 HEATER CORE

Heater cores are aftermarket replacements.

66-77		F-18476-3A	34.95
78-79	W/o A/C	18476-2	29.95
NEW! 78-79	W/A/C, OE style copper	18476-1A	39.95
78-79	W/A/C, replacement aluminum	18476-1	29.50
80-84	Aux. heater	F-18476-10A	74.95
80-84	Standard heater, w/o A/C	F-18476-6A	34.95
80-86	Hi-output heater, w/A/C	F-18476-7A	36.95
80-86	W/A/C, replacement aluminum	F-18476-9A	37.95
87-96		F-18476-9A	37.95
89-92	W/integral A/C, aluminum core, original	F-18476-9	90.00

18490 DUCT, Defroster

NEW! 68-77	Plastic, repro	F-18490-2A	74.95

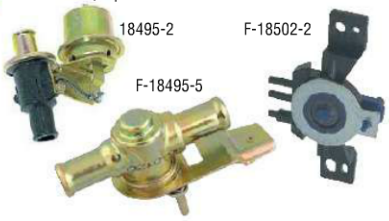

18495 CONTROL VALVE, Heater Water Shut-off

66-77	W/fresh air deluxe heater, Bowden cable operated	F-18495-5	30.75
78-79		18495-2	23.25
80-96	Aux. heater	18495-2	23.25

18502 CONTROL VALVE, Temperature Regulator

78-79		F-18502-2	49.95



18504 BLOWER FAN

71-77	(from 71 ser#K80,001)	F-18504-3	26.25
78-79		F-18504-3	26.25
80-86	Standard heater	F-18504-4	28.95
87-89	Standard heater	F-18504-5	33.98
90-96		F-18504-5	33.98

18518 CABLE and KNOB

66-67	Repro, with chrome bezel, less knob	F-18518-18A	24.95
68-72	Repro, with chrome bezel, less knob	F-18518-19A	24.95
73-77	Heater temp, repro, with chrome bezel, cable is 24.5", less knob	F-18518-17A	29.95
73-77	Defroster air, incl chrome bezel, cable is 15", less knob	F-18552-8	24.95
78-79	W/integral A/C or HiLo vent system	F-18518-8	20.00
78-79	W/integral A/C or HiLo vent system, original, limited NOS stock availability	F-18518-8A	39.95
78-79	Heater	F-18518-9	20.00
78-79	Heater, original, limited NOS stock availability	F-18518-9A	39.95
81-82	(from 11/80), heater	F-18518-11	60.00
84-86	Heater	F-18518-13	34.00
90-91	Heater and A/C	F-18518-15	55.03

18518 CLAMP KIT, Defroster/Heater Cable

66-77	Incl screw	18518-1K	2.95



18519 KNOB, Dash Controls

85-91	(from 3/85), wiper, htr, A/C, aux htr & A/C	F-18519-4	19.94
92-96	Heater & A/C control	F-18519-5	9.87



18527 BLOWER MOTOR, Heater

66-79	5/16" shaft, CW rotation	18527-3	78.25
80-81	Heater	18527-3	78.25
80-90	Aux. heater	F-18527-6	51.95
82-86	Heater	F-18527-4	102.50
82-86	W/integral A/C	F-18527-7	58.50
87-96	Heater or A/C	F-18527-5	68.95
90-92	Heater	F-18527-4	102.50



18545 BEZEL NUT, Heater Switch

66-77		F-18545-1	7.50



18552 CABLE ASSY., Heater Air

66		F-18552-10A	CALL
67		F-18552-11A	CALL
68-77	Defroster control	F-18552-9	24.95
78-79	Heater air	F-18552-2	16.95
80-82		F-18552-3	50.53
87-90		F-18552-7	46.80



18556 HOSE, Windshield Defroster

66-77	RH req' 13", LH reqs 29", cut to fit, 2.5" I.D., pair	18556-1A	14.95

18A568 HOSE CONNECTOR, Fresh Air Inlet

NEW!	66-77	Cowl to heater box	F-18A568-2A	44.95

18572 CLAMP, Heater Hose

66-79		F-18572-1	1.25

18578 SWITCH ASSY., Heater

See also 19986 A/C switches

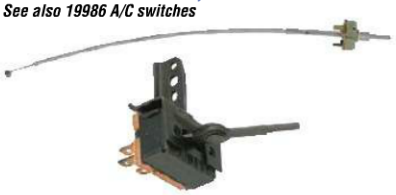

67-77	Front heater, incl cable, orig. Ford tooling	F-18578-14	42.50
78	(b4 ser#CA0,001), w/int. A/C	F-18578-15	24.25



NEW!	78-79	(from 78 serial# CA0,001)	F-18578-8	23.75
	80-89	W/integral A/C	F-18578-8	23.75
	80-82	W/dealer A/C	19986-7	35.95



83-89	W/dealer A/C	F-18578-10	94.95
87-89	W/integral A/C	F-18578-11	31.75



75-91	Heater, replacement	F-18578-12	20.95
90-91	W/A/C, factory or dealer installed	F-18578-8	23.75
92-96	W/A/C, factory or dealer installed	F-18578-16	12.50



18583 GASKET, Heater Blower Motor

66-72	To mount blower to box	F-18583-1	5.95

18598 BEZEL, Heater Control

66	On dash, repro	F-18598-1A	CALL
68-77	Repro	F-18598-3A	14.95



18591 RESISTOR ASSY., Heater Switch

78-79	Heater	F-18591-2	27.90
80-86	Heater or aux heater	F-18591-2	27.90



17513 KNOB, Heater Fan Switch

66	Correct style, repro	F-17513-4A	9.95
67-77	Original	F-17513-6	40.88
67-77	Repro	F-17513-6A	12.50

AIR CONDITIONING



2884 CLUTCH ASSY, Compressor

Note core charge on each item. See core information and requirements in the information section at the end of this catalog. Rebuilt unless noted otherwise.

73-82	W/dealer A/C	F-2884-2	175.95
78-79	W/integral A/C	F-2884-3	217.95
80-81	W/integral A/C	F-2884-3	217.95
82	W/integral A/C, excl 4.9l	F-2884-6	194.95
89	W/integral A/C, 5.0l, 5.8l	F-2884-9	94.95
89-92	W/integral A/C, 4.9l	F-2884-9	94.95
90-96	W/integral A/C, 5.0l, 5.8l, new	F-2884-15	98.95



2979 BRUSH/CONTACT ASSY., Compressor Clutch

78-79	8 cyl. eng's w/hang on A/C and York or Tecumseh compressors, original	2979-1	34.95
80-91	8 cyl. eng's w/dealer A/C-hang on and York or Tecumseh compressors, w/R-12 system, original	2979-1	34.95
80-91	W/R-12 system, replacement.	F-2979-3	11.95
94-96	W/R-134a systems	F-2979-2	13.95



TAG, A/C Compressor

66-81	Aluminum stamping	D-63	4.50



18A318 MOTOR, Vacuum Control

80-86	W/dlx heater, integral A/C, on htr plenum	F-18A318-3	12.50
80-86	W/dlx htr, integral A/C, on evaporator	F-18A318-4	CALL
80-86	W/A/C, hi-lo vent w/2 port chamber	F-18A318-5	57.95

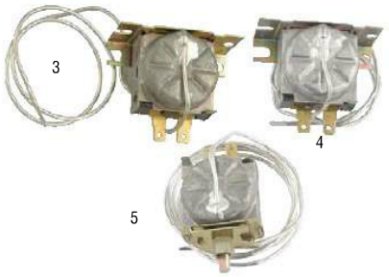

19618 SWITCH ASSY., Thermostatic Evaporator

78-79		F-19618-3	49.20
80-82	W/dealer A/C, HiLo vent system	F-19618-4	66.95
80-82	W/dealer A/C, excl HiLo vent system	F-19618-5	42.85
83-91	W/dealer A/C	F-19618-4	66.95



19703 COMPRESSOR ASSY., Rebuilt

Note core charge of $140 on each item. See core information and requirements in the information section at the end of this catalog.

78-81	W/dealer A/C	F-19703-4	247.95
78-81	W/integral A/C	F-19703-3	221.95
82-86	W/integral A/C	F-19703-5	314.95
87-88	W/integral A/C, 4.9l or 5.0l, 5.8l w/angle mounts	F-19703-6	327.95
87-88	W/integral A/C, 5.0l, 5.8l, w/o angle mounts	F-19703-5	314.95
89	W/integral A/C, 4.9l, 5.0l, 5.8l	F-19703-8	274.95
90-91	W/integral A/C, 5.0l, 5.8l	F-19703-8	274.95



19703 COMPRESSOR ASSY., New

All new compressors from OE suppliers.
No cores to return!

90-92	4.9l	F-19703-10	266.95
90-96	5.0l, 5.8l	F-19703-11	259.95


19A703-1A



19A703-1C



19A703-1D



19A703-1EP

19A703COVER PLATE, A/C Compressor

Custom aluminum cover has deep fins and is painted in wrinkle black with either brushed or polished fins. A great way to customize your engine compartment and cover the boring exposed compressor. Excellent match with Cobra finned aluminum valve covers. Fits all models with York or Tecumseh style compressors

66-81	Brushed fins: Plain (**A**), Ford oval (**C**), Cobra open letter (**D**), Cobra solid letter (**E**)	19A703-1_	39.95
66-81	Polished fins: Plain (**AP**), Ford oval (**CP**), Cobra open letter (**DP**), Cobra solid letter (**EP**)	19A703-1_	39.95

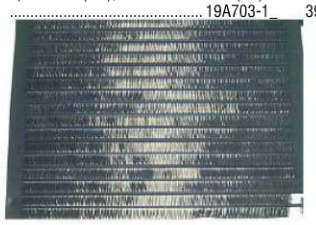

19712 CONDENSER ASSY

78-79		F-19712-2	164.95
80-93	W/integral A/C	F-19712-3	143.95
94-96	W/integral A/C	F-19712-4	129.95

A	2884	Clutch, compressor
B	2979	Contact assy, compressor
C	19703	Compressor assy
D	19A703	Plate, accessory
E	19712	Condensor assy
F	19837	Hose, liquid line
G	19867	Hose, compressor
H	19972	Hose, discharge
J	19959	Accumulator/dryer

Items in blue-check listings for applications.

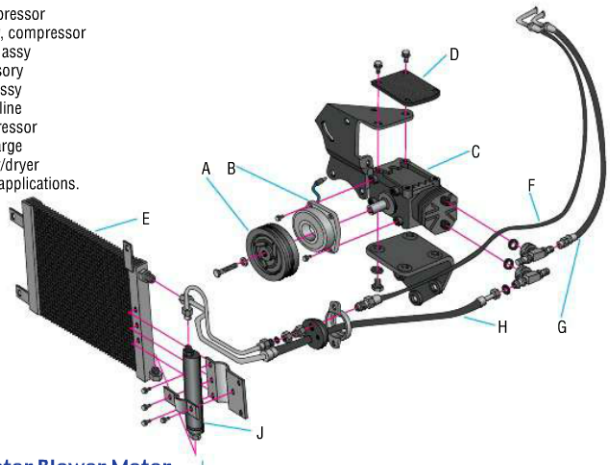

19A786VENT TUBE, Heater Blower Motor

NEW! 80-96	Integral A/C or hi-lo vent	F-19A786-1	6.95



19C827 HARNESS BLOCK ASSY, A/C Vacuum Hose

80-86	W/integral A/C and hi-lo vent, 3-1-1-1 nipples on plenum chamber	F-19C827-1	9.95





19849 EXPANSION VALVE ASSY.

78-91	W/dealer A/C	F-19849-1	44.95
78-79	W/integral A/C	F-19849-4	27.95
80-86	W/integral A/C, 5 pc set	F-19849-5	3.95
87-91	W/integral A/C, 5 pc set	F-19849-6	3.95



19860 EVAPORATOR CORE ASSY.

Evaporator cores are replacements unless noted otherwise.

78-79	W/integral A/C	F-19860-1	124.95
NEW! 82-86	W/integral A/C, 5/8" suction fitting, replacement	F-19860-4	145.95
84-86	W/integral A/C, original	F-19860-8	185.95
87-93	W/integral A/C, original	F-19860-6	202.95
87-93	W/integral A/C, replacement	F-19860-5	170.95
94-96	W/integral A/C, original	F-19860-9	108.50
94-96	W/integral A/C, replacement	F-19860-9A	136.95



19837 HOSE, Liquid Line, Replacement

Located between the condenser and evaporator.

87-93		F-19837-1	38.95

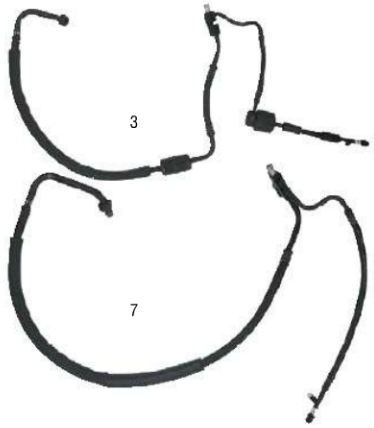

19867 HOSE ASSY, Replacement

Mounts between compressor and accumulator.

89-92	4.9l	F-19867-2	132.95
83-86	5.0l, 5.8l, integral A/C, pre-charged, has manual shut-off valve located at compressor hose connection	F-19867-50	45.95
85-86	5.0l, 5.8l, integral A/C, in-plant charged, hoses connected directly to compressor	F-19867-52	50.85
88	5.0l, 5.8l, w/integral A/C	F-19867-1	122.95
89-93	5.0l, 5.8l	F-19867-3	129.95
94-96	5.0l, 5.8l	F-19867-7	85.95

391305 O-RING, A/C

80-96	Green, 3/4" O.D., line end, ea.	391305-S	1.00



19972 HOSE, Discharge, Replacement

Located between compressor and condenser.

83-86	5.0l, 5.8l, w/integral A/C	F-19972-1	49.95
87	5.0l, w/integral A/C	F-19972-2	35.95

F-19B888-1 F-19B888-2



19B888 SWITCH ASSY, A/C Damper Door

78-79	W/integral A/C	F-19B888-1	99.95
78-79	W/deluxe heater vent, original Ford tooling	F-19B888-2	58.50



19B888 SWITCH ASSY, A/C Vacuum Selector Valve

78-79	W/deluxe heater vent, original Ford tooling	F-19B888-3	49.95
NEW! 80-82	W/integral A/C, dealer A/C w/ hi-lo vent, original Ford tooling	F-19B888-4	CALL

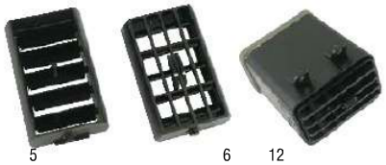

5 6 12

19893 REGISTER, A/C

78-79	LH, black plastic with chrome border, original Ford tooling	F-19893-2A	34.95
80-86	W/integral A/C or HiLo vent system, LH	F-19893-5	27.53
87-91	W/integral A/C, one on each side of glove box reqd	F-19893-6	44.95
92	W/integral A/C on instrument cluster, center	F-19893-12	32.98
92-93	W/integral A/C on instrument cluster, RH	F-19893-12	32.98



19959 RECEIVER/DRYER, Accumulator

78-79	W/dealer A/C	F-19959-3	19.95
78-79	W/integral A/C, fittings on same end	F-19959-6	39.95
80-81	W/dealer A/C	F-19959-3	19.95
80-81	W/integral A/C	F-19959-7	56.95
82-95	W/dealer A/C	F-19959-3	19.95
82	W/integral A/C	F-19959-8	47.95
83-93	W/integral A/C	F-19959-9	46.95
94-96		F-19959-10	74.95

F-19986-1



19986 SWITCH, A/C Blower Motor

See also 18578 heater blower switches.

78-91	(from 78 ser#CA0,001), w/integral A/C	F-19986-1	26.85
80-82	W/dealer A/C	F-19986-2	10.95

We proudly feature quality cooling components from:

PROLIANCE

Air Pro QUALITY PARTS

Ready-Aire®

(formerly known as Modine)



Brett Hauke

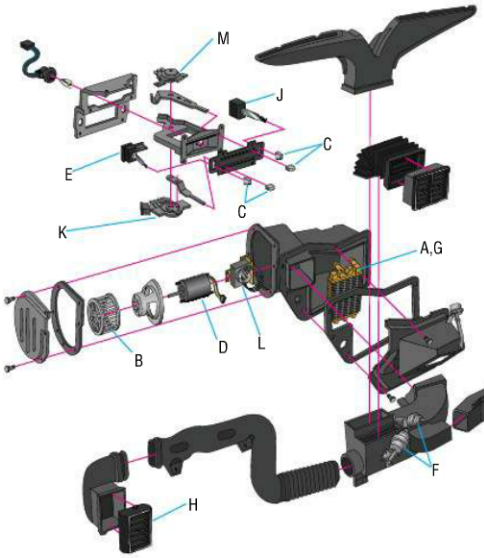

A 18476 Heater core
B 18504 Blower fan
C 18519 Knob, control
D 18527 Blower motor
E 18578 Switch, heater
F 18A318 Motor, vacuum control
G 19860 Evaporator
H 19893 Register
J 19986 Switch, A/C
K 19B888 Switch assy, vacuum
L 19618 Switch, thermostatic evaporator
M 18502 Control valve, temp regulator
Items in blue-check listings for applications.

GRILLE SECTION INFORMATION

Grille 1966-77..... pg 106 *Grille 1978-79 .....pg 106*
Grille 1980-86..... pg 106 *Grille 1987-91 .....pg 107*
Grille 1992-96..... pg 107 *Custom grille.....pg 108*

Some abbreviations found in this section (alphabetical-read across):

excl.....excludes *incl..... includes*
LH ..... drivers side *OE.Original equipment style*
opt..... Option (al) *pc (s) ..... Piece (s)*
Repl'mt..... Replacement *reqd.....Required*
reqs ..... Requires *RH ..... passenger side*
ser# ..... serial number *w/.....Used with*
W/o.....Used without *#.....pounds-when used following a number (8500#= 8500 pounds)*

A complete listing of abbreviations may be found at the rear of this catalog.

GRILLE 1966-77

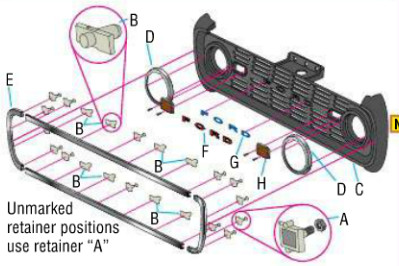

A 8244 Retainer, grille molding
B 291B80 Retainer, grille molding
C 8200 Grille panel
D 13064 Door, head light
E 8169 Molding set, grille, 4pc
F 8316 Emblem, grille
G 8A200 Transfer emblem, grille
H 13200 Parking light
Items in blue-check listings for applications.

8169 MOLDING SET, GRILLE

66-77 4 pc set F-8169-1B 164.95



8200 GRILLE, Radiator

66-68 Original Ford tooling, **OS**..... F-8200-19 499.95
69-77 Original Ford tooling, **OS**..... F-8200-15 499.95

8244 RETAINERS, Grille Molding

66-77 3 reqd on top & bottom moldings, 4 reqd on each side molding, each F-8244-1 3.00
66-77 4 reqd on top & bottom molding, original, each 291B80-1 12.68
66-77 As above, repro, each..... F-291B80-1 3.00



13064 DOOR, Headlight

66-70 Painted, 2 reqd..... F-13064-61A 34.95
67-70 Chrome, will fit 66 but not correct, 2 reqd F-13064-61B 74.95
71-77 Painted, 2 reqd..... F-13064-62A 34.95
71-77 Chrome, 2 reqd F-13064-62B 74.95

For other parts not listed here see also the Body parts section on following pages.

GRILLE 1978-79

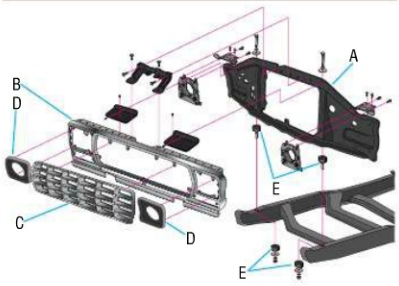

A 16138 Support, radiator
B 8200 Grille
C 8150 Insert, grille
D 13064 Door, head light
E 8125 Insulators, rad mounting
Items in blue-check listings for applications.

8C122 HEAT SHIELDS, Radiator Support, To Grill

NEW! 78-79 ..... F-8C122-1 9.95



8150/8200 GRILLE, Radiator

78-79 Outer, standard, bright anodized finish, original Ford tooling, **TF**..... F-8200-7 549.95
NEW! 78-79 Outer, standard, bright, repro, **TF** F-8200-7A 159.95
78-79 Inner, bright argent, original Ford tooling F-8150-4 89.95
78-79 Argent, repro..... F-8150-4A 29.95
78-79 Inner, chrome & argent, orig.. F-8150-6 120.00
78-79 Chrome & argent, repro F-8150-6A 89.95
78-79 Argent & charcoal, repro..... F-8150-5A 29.95



13064 DOOR, Head Light

For round head light:

78-79 RH, argent, orig Ford tooling.. F-13064-11 34.95
78-79 RH, argent & charcoal, repro . F-13064-11A 21.75
78-79 LH, argent, orig Ford tooling.. F-13064-12 34.95
78-79 LH, argent & charcoal, repro.. F-13064-12A 21.75

For rectangular head light:

78-79 RH, argent, orig Ford tooling.. F-13064-13 34.95
78-79 RH, argent & charcoal, repro . F-13064-13A 19.95
78-79 LH, argent, orig Ford tooling.. F-13064-14 34.95
78-79 LH, argent & charcoal, repro.. F-13064-14A 19.95
78-79 RH, chrome, orig Ford tooling F-13064-15 34.95
78-79 RH, bright finish, repro F-13064-15A 19.95
78-79 LH, chrome, orig Ford tooling F-13064-16 34.95
78-79 LH, bright finish, repro..... F-13064-16A 19.95

For other parts not listed here see also the Body parts section on following pages.

GRILLE 1980-86

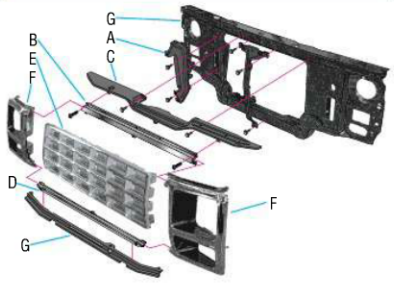

A 8182 Support, grille
B 8419 Molding, grille, lower
C 8B218 Molding, grille retainer
D 8422 Molding, grille
E 8200 Grille
F 13064 Door, head light
G 16138 Support, radiator
H 17779 Stone deflector
J 42528 Ornament, grille
Items in blue-check listings for applications.



8182/3 SUPPORT, Radiator Grille

80-86 RH, replacement on 80-82's, repro F-8182-1 54.95
80-86 LH, replacement on 80-82's, repro F-8183-1 54.95



8B218 MOLDING, Grille Retainer

80-86 Upper, repro..... F-8B218-1 24.95

8419/8422 MOLDING, Radiator Grille

80-86 Upper, repro..... F-8419-2A 18.25
80-86 Lower, original F-8422-1 125.00
80-86 Lower, repro..... F-8422-1A 18.25

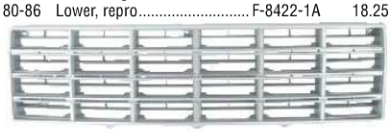



8150/8200 GRILLE, Radiator

80-81 Argent, replacement..... F-8150-2A 54.50
80-81 Chrome, replacement..... F-8150-3A 109.95
80-81 Black, replacement..... F-8150-2D 53.95
83-86 Argent & black, original..... F-8200-8 99.95
82-86 Argent & black, repro..... F-8200-8A 49.95
82-86 Chrome & charcoal, repro..... F-8200-9A 79.50
82-86 Charcoal & black, repro..... F-8200-10A 29.95



13064 DOOR, Head Light

Use the following black doors with an argent grille.

80-86 RH, chrome & black, repro F-13064-17A 26.95
80-86 LH, chrome & black, repro F-13064-18A 26.95

Use the following argent doors with a chrome grille.

80-81 RH, chrome & argent, repro... F-13064-19A 35.25
80-81 LH, w/bright grille option, chrome and med. argent, original F-13064-20 97.95
80-81 LH, chrome & argent, repro ... F-13064-20A 35.25

Use the following with grilles as listed.

82-86 LH, w/bright grille opt., chrome/charcoal, original F-13064-22 150.00
82-86 RH, chrome & charcoal, repro F-13064-21A 26.95
82-86 LH, chrome & charcoal, repro F-13064-22A 26.95
82-86 RH, chrome & gloss black, repro F-13064-23A 22.95
82-86 LH, chrome & gloss black, repro F-13064-24A 22.95

For other parts not listed here see also Cab Body parts section on following pages.

GRILLE 1987-91



8200 GRILLE, Radiator

87-88 Black, replacement, w/o plate. F-8200-11A 34.95
87-88 W/plate, black, repro F-8200-11B 38.50
87-88 Chrome and dk. argent, replacement, w/o plate F-8200-12A 69.95
87-88 W/plate, chrome & argent, repro F-8200-12B 69.95
89-91 Chrome, original F-8200-13 198.13
89-91 Chrome & charcoal, replacement, w/o plate F-8200-13A 79.50
89-91 Painted, original ..... F-8200-14 ****
89-91 Painted, replacement..... F-8200-14A 39.95

For other parts not listed here see also Cab Body parts section on following pages.



8327 DEFLECTOR, Radiator

87-90 300, at grille, upper..... F-8327-1 50.00
91 At grille lower, limited NOS stock availability F-8327-3 29.95

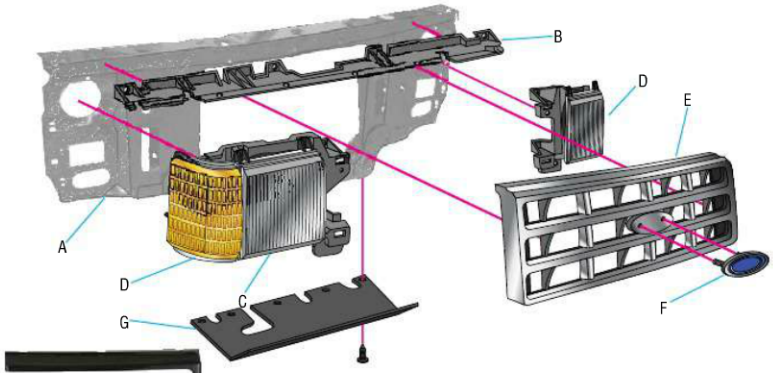



13064 DOOR, Head Light

NEW!

91 Nite, RH, black F-13064-27 23.95
91 Nite, LH, black..... F-13064-28 23.95

A 16138 Support, radiator
B 8327 Deflector, radiator upper
C 13007 Head light lens
D 13008 Head light assy
E 8200 Grille
F 8213 Ornament, grille
G 8327 Deflector, radiator, lower
Items in blue-check listings for applications.

GRILLE 1992-96



8A284 REINFORCEMENT, Grille Opening Panel

92-96 **OS**..... F-8A284-10A 31.95



F-8200-16A



F-8200-27B

8200 GRILLE, Radiator

92-96 Gray, original, paint to match . F-8200-16 138.60
92-94 Gray, replacement, paint to match F-8200-16A 39.50
92-95 Chrome & black, replacement F-8200-17A 62.95
92-96 Black, repro, paint to match for all body color grilles F-8200-18A 43.25
92-96 Chrome & platinum, repro F-8200-27B 64.95
95-96 Platinum & chrome, original .. F-8200-27 134.56



13064 DOOR, Head Light

92-94 RH, black, replacement F-13064-31A 19.95
92-94 LH, black, replacement..... F-13064-32A 19.95
92-96 RH, primered, replacement F-13064-29B 19.95
92-96 LH, primered, replacement..... F-13064-30B 19.95

92-96 RH, chrome, original F-13064-33 51.12
93-96 RH, chrome & argent, replacement F-13064-33A 21.95
92-96 LH, chrome, original F-13064-34 51.75
93-96 LH, chrome & argent, replacement F-13064-34A 21.95
93-96 RH, platinum & argent, orig ... F-13064-29 41.00
93-96 RH, argent, replacement F-13064-29A 19.95
93-96 LH, platinum & argent, orig.... F-13064-30 41.00
93-96 LH, argent, replacement..... F-13064-30A 19.95
93-96 RH, black, PTM, original F-13064-31 199.95
93-96 RH, black, replacement, PTM. F-13064-31A 19.95
93-96 LH, black, PTM, original..... F-13064-32 199.95
93-96 LH, black, replacement, PTM . F-13064-32A 19.95

PTM=paint to match. For other parts not listed here see also Cab Body parts section on following pages.

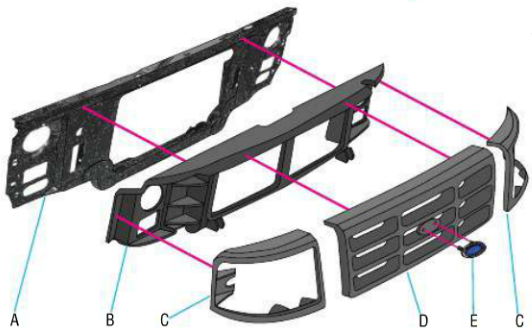

A 16138 Support, radiator
B 8A284 Reinforcement, grille
C 13064 Door, head light
D 8200 Grille
E 8213 Ornament, grille
Items in blue-check listings for applications.

TF =Truck Freight, OS =UPS Oversize. See shipping information on inside back cover.

CUSTOM GRILLE

GRILLE, Custom Tube by Stull Industries

Steel tube

Triple plated for lasting durability. Easy installation.

		Square tube		Round tube	
		Part#	Price	Part#	Price
78-79	Chrome	F-8200-21A	186.95	F-8200-21C	174.95
80-86	Chrome	F-8200-22A	197.95	F-8200-22C	192.95
87-91	Chrome	F-8200-23A	222.95	-	-



Billet Aluminum

T-6 aircraft grade aluminum. Easy installation for a perfect fit. All hardware included.

Aluminum billet grilles:

	Brushed		Polished	
	Part#	Price	Part#	Price
80-86	F-8200-22E	139.95	F-8200-22F	153.95
87-91	F-8200-23E	133.95	F-8200-23F	147.95

BODY SECTION INFORMATION

Body bolt kits ..... pg 108
Lift/tail gate 66-77.. pg 111
Tail gate 78-96 ..... pg 116
Body accessories ... pg 118
Grille/facia bra ..... pg 120
Body panels 1966-77 pg 108
Body panels 1978-96 pg 112
Body mounting..... pg 117
Fender flares ..... pg 119
Splash guards..... pg 120

Some abbreviations found in this section (alphabetical-read across):

incl ..... includes
OE Original equipment style
Repl'mt..... Replacement
reqs ..... Requires
w/..... Used with
excl ..... excludes
LH..... drivers side
pc (s) ..... Piece (s)
reqd.....Required
RH ..... passenger side
W/o ..... Used without

 # pounds-when used following a number (8500#= 8500 pounds)

A complete listing of abbreviations may be found at the rear of this catalog.

BODY

Stainless steel master Body Assembly Kits by:

MASTER BODY ASSY KIT

Stainless steel components. Cab kits include interior and exterior screws were available. They do not include body mounting, engine, chassis or other mechanical screws.

66-77	Button head	F-00001-66BSB	142.95
66-77	Hex head	F-00001-66BSH	143.95
66-77	Indented hex head	F-00001-66BSI	144.95
78-79	Button head	F-00001-78SB	171.95
78-79	Hex head	F-00001-78SH	163.95
78-79	Indented hex head	F-00001-78SI	164.95
80-86	Button head	F-00001-80SB	131.95
80-86	Hex head	F-00001-80SH	119.95
87-91	Button head	F-00001-87SB	163.95
87-91	Hex head	F-00001-87SH	143.95



MASTER BODY ASSEMBLY KIT, by AMK

Concours correct fasteners.

66	302 pcs	F-00001-66B	149.00
67	308 pcs	F-00001-67B	149.00
68	337 pcs	F-00001-68B	149.00
69-70	319 pcs	F-00001-69B	149.00

See also Master Body Assembly kit listings following the Grille section.

BODY PANELS 1966-77

A	16612	Hood
B	16892	Latch, hood
C	16929	Pin & spring, hood catch
D	16005	Fender
E	02038	Cowl panel
F	16054	Apron, fender
G	8A193	Bracket set, radiator
H	8125	Insulator, radiator bracket
J	16138	Radiator support
K	16140	Hanger set, radiator
L	01988	Air duct, upper
M	02500	Pillar post, door hinge
N	02500	Repair panel, door hinge post
O	02046	Wheel tub, front
P	16138	Brace set, radiator support
Q	011135	Floor pan, front
R	011135	Floor pan, center
S	011135	Floor pan, RH cutout
T	011135	Toe board, front floor
U	000350	End panel, quarter panel
V	0112A48	Extension panel, rear floor front
W	011252	Extension panel, rear floor rear
X	011215	Floor, rear
Y	010128	Rocker panel
Z	27886	Wheelhouse
AA	20200	Door skin, full
BB	20200	Repair panel, lower door skin
CC	20130	Repair panel, lower door shell
DD	202A62	Support panel, inside door rear
EE	278A68	Repair post, tailgate support
FF	27840	Quarter panel, skin, upper roll
GG	27840	Quarter panel, skin, lower face
HH	280A58	Repair panel, quarter panel tail light extension
JJ	405A26	Door, fuel filler
KK	40700	Tailgate
LL	03014	Frame, windshield

Items in blue -check listing for applications.

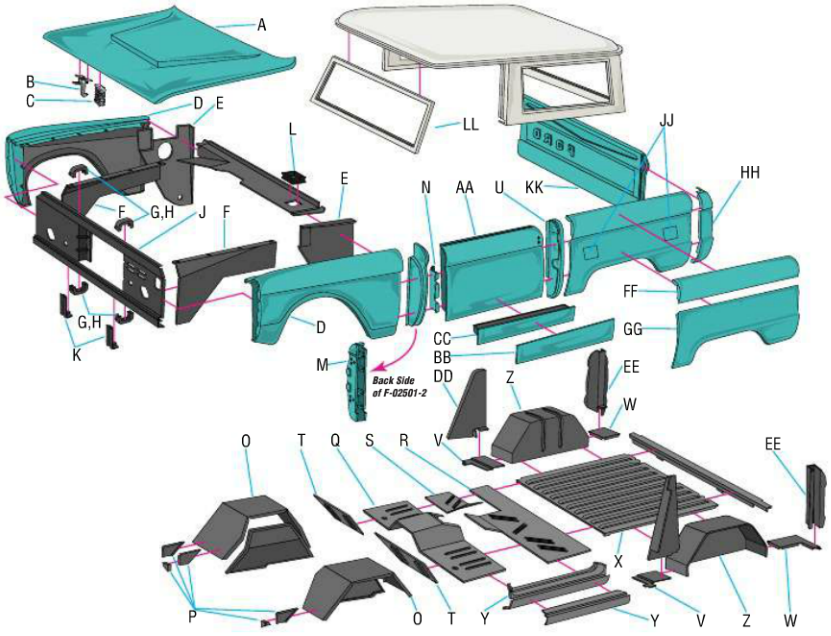

03014 FRAME, Windshield

NEW! 66-77 Steel, repro F-03014-1A 285.95



8124/5 PAD/INSULATOR, Radiator Support

66-77 U-shaped, 4 reqd F-8125-3 19.95
66-77 W/3 row radiator, U-shaped, set of 4 ..... F-8125-3A 11.95
66-77 W/4 row radiator, U-shaped, set of 4 ..... F-8125-3B 11.95



16005/6 FENDER, Front

66-77 RH, good repro, **TF** F-16005-9A 199.95
66-77 RH, improved repro, **TF** F-16005-9B 249.95
66-77 LH, good repro, **TF** F-16006-9A 199.95
66-77 LH, improved repro, **TF** F-16006-9B 249.95



16054/5 FENDER APRON

66-77 RH, repro F-16054-15A 64.95
66-77 LH, repro F-16055-15A 64.95



16700 PIN KIT, Hood

66-77 Mustang style, required for use with fiberglass hoods 16700-1A 49.95



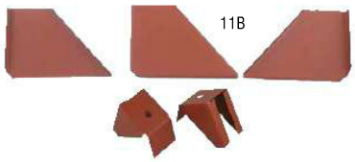

16138 RADIATOR SUPPORT

66-77 Support, repro, **OS** F-16138-11A 249.95
66-77 Brace and bracket mtg set to apron/wheelhouse (3pcs) and lower radiator mounting brackets (2pcs), now 5 pcs total! Repro F-16138-11B 55.95



16140 HANGERS, Radiator

66-77 Welds to support, lower, repro F-16140-1 114.95

16612 HOOD



66-77 Repro, steel, stock style, **TF** ... F-16612-15A 298.95





66-77 Fiberglass, cowl induction style, **TF** F-16612-15D 404.95
NEW! 69-77 Steel, cowl induction style, late 69 fits 66-early 69 as welll, **TF** F-16612-15F 449.95



66-77 Fiberglass, scoop style, **TF** F-16612-15E 403.95

Fiberglass hoods require the installation of a prop rod and hood pins.

16826 PROP ROD, Hood

66-77 Stainless steel F-16826-4B 25.95



16892 CATCH, Hood Safety

66-77 Stainless steel, exact repro excluding finish F-16892-5B 27.25

16929 PIN & SPRING ASSY, Hood Catch

66-77 Stainless steel, exact repro excluding finish F-16929-5B 35.95



United Parcel Service will not carry any package whose length and girth exceed 130 inches. This limitation rules out many of our large body panels. Items too large for UPS must be shipped via Truck Line. The following must be shipped by truck:

- ***Fenders, all years***
- ***Hoods, all years***
- ***Quarter Panels, all years***
- ***Full-Face Quarter Repair Panels, all-years***
- ***Full Size Trunk Pans, all years***
- ***Door Shells, all years***
- ***There may be other truck-only items not listed here.***

Freight Charges

Our $300.00 free-shipping policy does not apply to truck freight orders. We work closely with LTL carriers to bring you the most competitive rates possible. Please call the NPD location closest to you for the best freight quote.

Inspection of Goods

Upon delivery, do not allow the driver to leave the premises until you have made a thorough inspection of your merchandise. Note any damage on the shipping company's bill. If damages are not noted before the delivery is signed for, the shipping company may refuse to pay the claim. Our pre-ship inspection assures that the parts leave NPD's warehouse damaged-free and that's how they should be delivered. It is important that you take immediate steps to report damaged goods to the carriers so that any items damaged in-transit can be replaced. If you have any questions regarding this procedure, please phone us toll-free.



01988 AIR DUCT, Upper
66-77 Plastic repair F-01988-2 39.95

02038/9 COWL REPAIR PANEL
66-77 RH F-02038-2A 85.95
66-77 LH F-02039-2A 85.95



02046/7 WHEEL TUB, FRONT
66-77 RH, **OS** F-02046-1A 107.95
66-72 LH, **OS** F-02047-1A 107.95
73-75 LH, **OS** F-02047-1B 107.95
NEW! 76-77 LH, **OS** F-02047-1C 107.95

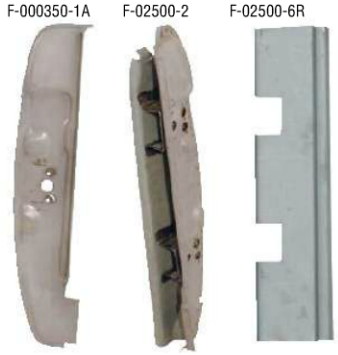

000350/1 END CAP, Quarter Panel
66-67 RH, striker post brace ..... F-000350-1B 84.95 NEW!
66-67 LH, striker post brace ..... F-000351-1B 84.95 NEW!
68-77 RH, striker post brace F-000350-1A 84.95
68-77 LH, striker post brace F-000351-1A 84.95

02500/1 DOOR POST, Front Body
67-77 RH, front hinge mtg, incl reinforcement F-02500-2 192.95
67-77 LH, front hinge mtg, incl reinforcement F-02501-2 192.95

02500/1 DOOR POST REPAIR, Front
66-77 RH, around hinge mount-door side only, not die stamped F-02500-6R 16.50
66-77 LH, around hinge mount-door side only, not die stamped F-02501-6R 16.50



03850 FOLDDOWN LATCH KIT, Windshield
66-68 4 pcs (bracket, handle, loop & spring) F-03850-1 179.95

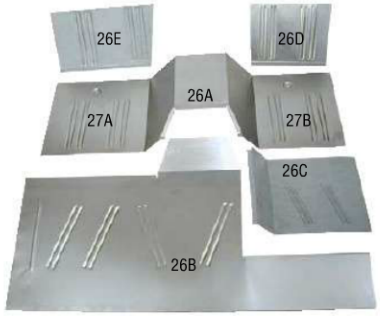

011135 FLOOR PAN
66-77 Front, full width, repro, **OS** F-011135-26A 171.95
66-77 Center, full width w/o RH cutout, **OS** F-011135-26B 199.95
66-77 RH cutout repair panel F-011135-26C 45.95
66-77 Firewall toe board, patch panel, RH F-011135-26D 42.95
66-77 Firewall toe board, patch panel, LH F-011135-26E 42.95
NEW! 66-77 Cover, trans tunnel F-011135-26F 49.95
NEW! 66-77 RH, incl body mount recesses F-011135-27A 85.95
NEW! 66-77 LH, incl body mount recesses F-011135-27B 85.95



011215 FLOOR, Cab Rear
66-77 Cargo area, repro, imported, **TF** F-011215-9A 183.95



20124 ROADSTER INSERT, Door Opening
66-77 Highly reinforced fiberglass, excellent contours provide for an easy installation, pair, use to replace existing Roadster inserts or use to convert to Roadster body F-20124-16F 471.95

TF =Truck Freight, OS =UPS Oversize.
See shipping information on inside back cover.



0112A48/9 FLOOR PAN, Front Extension Panel
Front of wheelhouse to floor extension:
66-77 RH F-0112A48-1A 24.50
66-76 LH F-0112A49-1A 24.50
NEW! 77 LH F-0112A49-1B 24.50

011252/3 FLOOR PAN, Rear Extension Panel
Rear of wheelhouse to floor extension:
66-77 RH F-011252-1A 24.50
66-76 LH F-011253-1A 24.50
NEW! 77 LH F-011253-1B 24.50



010128/9 ROCKER PANEL, Outer
66-77 Outer, original Ford tooling, fits RH or LH, original upwards curved ends for a perfect fit F-010128-8B 99.95
66-77 RH or LH, die stamped, imported F-010128-8A 62.50
66-77 Not die stamped, repair, fits either side F-010128-8R 26.75



20130/1 REPAIR PANEL, Door Lower
66-77 RH, inside F-20130-1A 84.95
66-77 LH, inside F-20131-1A 84.95



20200/1 DOOR SKIN, OUTER
66-77 RH, full, repro, **OS** F-20200-7 214.50
66-77 LH, full, repro, **OS** F-20201-7 214.50



20200/1 DOOR SKIN, Outer Repair Lower
66-77 10" tall, not die stamped, R/L. F-20200-5R2 33.75


F-202A63-1A

202A62 SUPPORT PANEL, Inside Door Rear
Supports the quarter pillar latch

66-77 RH F-202A62-1A 24.50
66-76 LH F-202A63-1A 24.50
NEW! 77 LH F-202A63-1B 24.50



27840 QUARTER PANEL, Full Face Repair
66-77 RH, 51" long x 23" high, **OS** .. F-27840-6R 139.95
66-77 LH, 51" long x 23" high, **OS** ... F-27841-6R 139.95



27840 QUARTER PANEL, Upper Roll
66-77 RH, 51" long, incl end cap F-27840-6R2 107.95
NEW! 66-77 LH, 51" long, incl end cap F-27841-6R2 107.95


1R

278A68/9TAIL GATE POST
NEW! 66-77 RH F-278A68-1B 42.95
NEW! 66-77 LH F-278A69-1B 42.95
Repair section
66-77 RH F-278A68-1R 37.50
66-77 LH F-278A69-1R 37.50


F-27886-5R


F-27886-6A

27886/7 WHEELHOUSE PANEL, Rear
66-77 Repro, fits RH or LH, **OS** F-27886-5R 59.95
66-77 RH, improved repro, **OS** F-27886-6A 69.95
66-77 LH, improved repro, **OS** F-27887-6A 69.95



F-405A26-4A

280A58/9TAIL LIGHT REPAIR PANEL
66-77 RH F-280A58-5R 58.95
66-77 LH F-280A59-5R 58.95

405A26DOOR, Fuel Filler
77 W/o fuel filler pipe, incl handle F-405A26-3 44.95
77-79 W/fuel filler pipe, repro F-405A26-4A 24.95



40700 TAIL GATE
66-77 Repro, galvanized steel, original Ford tooling, replacement for 66, **TF** F-40700-10 449.95

50202 MOUNTING KIT, Full Length Cap
67-77 Attach cap to body:
Stainless steel button head bolts F-50202-66SB 19.50
Stainless steel hex head bolts F-50202-66SH 19.60
Stainless steel indented hex head bolts F-50202-66SI 19.95

LIFTGATE/TAILGATE 1966-77


1 1A

21952 RETAINER, Latch Rod
66-75 Liftgate 3 reqd, door 12 reqd, all plastic 21952-1 1.95
66-75 Liftgate 3 reqd, door 12 reqd, plastic and metal as original 21952-1A 4.50



F-43000-1

43000 HINGE, Tailgate
66-77 2 reqd, original Ford tooling ... F-43000-1 24.95
66-77 "Silencer", zinc steel, replacement with urethane bushing for silent opening- not metal on metal screeeeetch! F-43000-1A 59.95



431B54STRIKER, Tailgate Latch
66-77 On body, 2 reqd F-431B54-1 16.95

TF =Truck Freight, OS =UPS Oversize.
See shipping information on inside back cover.



431D72 BOLT & NUT, Tailgate Release Handle Pivot
66-77 Connects handle to the tailgate release rods F-431D72-1 15.00



431D76/7 LATCH ASSY, Tailgate Side
66-77 RH or LH, original Ford tooling F-431D76-2 49.95

431A78LINK RODS, Tailgate Latch Release
66-77 Pair F-431A78-4 14.95


1

431B82 RELEASE HANDLE, Tailgate Latch
66-77 Zinc F-431B82-1 24.95
66-77 Chrome plated F-431B82-2 34.95
66-77 Polished stainless steel F-431B82-3 34.95

431B82MOUNTING KIT, Release Handle
66-77 Tailgate latch, stainless steel (4) F-431B82-1K 1.99



431C78MOUNTING PLATE, Tailgate Release
66-77 Cad plated F-431C78-1 32.95
66-77 Stainless steel F-431C78-1A 42.95


F-43400-6

43400 RELEASE HANDLE ASSY, Liftgate
67-77 (from 67 ser#A42,001), w/lock cylinder F-43400-6 47.95

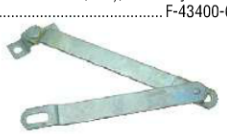

44400 SUPPORT, Tailgate
66-77 2 reqd, original, limited NOS stock availability F-44400-1A 49.95
66-77 Repro, 2 reqd F-44400-1 32.50

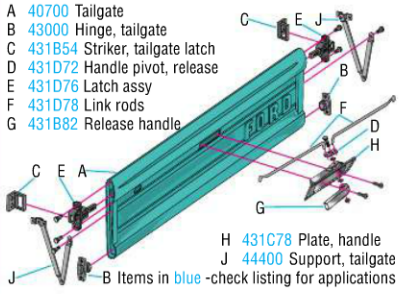

A 40700 Tailgate
B 43000 Hinge, tailgate
C 431B54 Striker, tailgate latch
D 431D72 Handle pivot, release
E 431D76 Latch assy
F 431D78 Link rods
G 431B82 Release handle
H 431C78 Plate, handle
J 44400 Support, tailgate
B Items in blue -check listing for applications



8C122 HEAT SHIELD, Grille

78-79	Radiator support to grille, pair	F-8C122-1	9.95



10

8125 PAD, Radiator Support

NEW!	80-84	Lower, RH	F-8125-8	7.95
NEW!	80-84	Lower, LH	F-8125-9	7.95
	85-96	Lower, 2 reqd	F-8125-10	29.00



8A284 REINFORCEMENT, Grille Opening Panel

92-96	Replacement, **TF**	F-8A284-10A	31.95



16005/6 FENDER, Front

FULL, original or reproduction/replacement. Truck freight

78-79	RH, original, **TF**	F-16005-6	349.95
78-79	RH, repro, **TF**	F-16005-6A	199.95
78-79	LH, repro, **TF**	F-16006-6A	199.95



80-86	RH, repro, **TF**	F-16005-7A	116.95
80-86	LH, repro, **TF**	F-16006-7A	116.95



F-16005-8A

87-91	RH, repro, **TF**	F-16005-8A	149.95
87-91	LH, repro, **TF**	F-16006-8A	149.95
90-91	LH, original, **TF**	F-16006-10	350.00



F-16005-11

92	RH, original, **TF**	F-16005-11	728.20
92-96	RH, repro, **TF**	F-16005-11A	99.95
93-96	LH, original, **TF**	F-16006-12	728.20
92-96	LH, repro, **TF**	F-16006-11A	99.95

TF =Truck Freight, OS =UPS Oversize.
See shipping information on inside back cover.

16054/5 APRON, Front Fender



F-16054-2A

78-79	RH, repro, **OS**	F-16054-2A	84.95
78-79	LH, repro, **OS**	F-16055-2D	84.95



F-16054-4

87-96	RH, gas eng's, **OS**	F-16054-4	58.10
87-96	RH, repro, **OS**	F-16054-4R	39.95
87-96	LH, gas eng's, **OS**	F-16055-5	80.18
87-96	LH, repro, **OS**	F-16055-4R	39.95



F-16054-2R

16054/5 FENDER APRON & HINGE SUPPORT, Upper Repair

78-79	RH	F-16054-2R	43.95
78-79	LH	F-16055-2R	43.95

1978-1996 Bronco

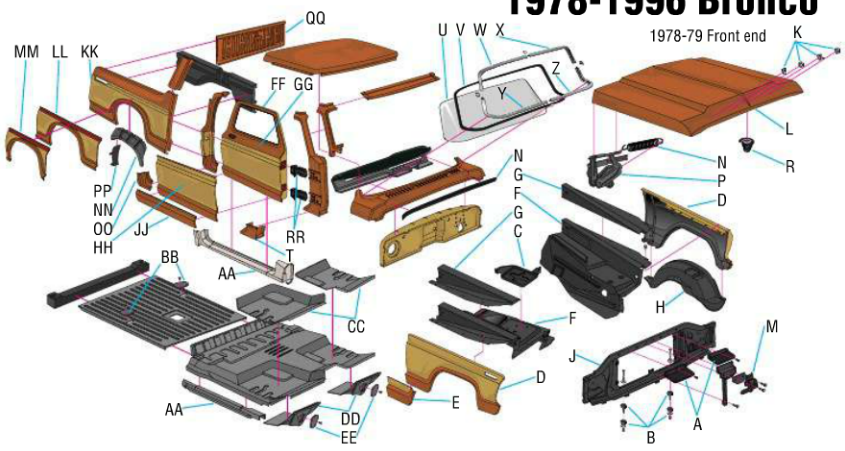

A	8C122	Shield, radiator support		F	16054	Fender apron
B	8124	Insulators, radiator mount		G	16054	Repair panel, fender apron
C	10732	Battery tray		H	16102	Splash shield, fender
D	16005	Fender		J	16138	Radiator support
E	16005	Repair panel, fender		K	16606	Ornament, hood



16102/3 SPLASH SHEILD, Front Fender

78-79 RH, plastic, **OS** F-16102-1 124.95
78-79 LH, plastic, **OS** F-16103-1 124.95

16138 SUPPORT, Radiator



Radiator supports with 2 mounting holes have 28 1/2" between mtg holes. Supports with 4 mounting holes have 23" and 25 1/2" between mtg holes.



78-79 Round head lights & 2 mtg holes, **TF** F-16138-2A 149.95
78-79 Round head lights & 4 mtg holes, **TF** F-16138-3A 149.95



80-84 29" opening, when using w/6 cyl. eng. sides must be filled w/tire carcass., repro, **TF** F-16138-5A 149.95



87-91 12 x 39" opening, repro, **TF** ... F-16138-7A 202.95

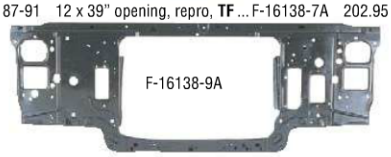

92-96 Original, **TF** F-16138-9 816.08
92-96 Repro, **TF** F-16138-9A 239.95



16A138/9 REINFORCEMENT, Radiator Support

92-96 RH, repro F-16A138-1A 19.95
92-96 LH, repro F-16A139-1A 19.95

16612 HOOD



78-79 Original, **TF** F-16612-4 399.95
78-79 Repro, **TF** F-16612-4A 319.95



80-86 Repro, **TF** F-16612-5A 199.95

F-16612-6A



87-91 Repro, **TF** F-16612-6A 228.95



92-96 Original, **TF** F-16612-10 1423.02
92-96 Replacement, **TF** F-16612-10A 155.95





With cowl induction hood scoop, uses OE hinges and latch, 3 year mfgr warranty
92-96 All steel! **TF** F-16612-10E 497.95

combined body illustration

1980-96 Front end

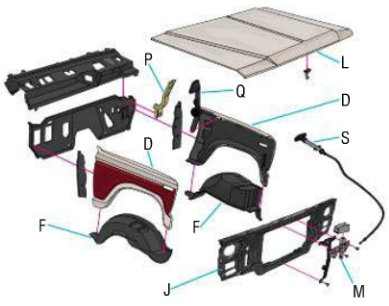

L 16612 Hood
M 16700 Release, hood
N 16740 Seal, cowl
O 16789 Spring, hood hinge
P 16796 Hinge, hood
Q 16826 Spring, hood hinge
R 16912 Spring, hood release
S 16916 Cable, hood release
T 02500 Repair panel, lower hinge post
U 03100 Windshield
V 03110 Gasket, windshield
W 03136 Molding, windshield
X 03137 Molding, windshield
Y 03144 Molding, windshield
Z 03145 Molding, windshield
AA 010128 Rocker panel
BB 011117 Plug, floor pan rear
CC 011135 Floor repair, cab front
DD 011135 Reinforcement, cab mount floor
EE 011180 Cover, cab mount access
FF 20124 Door shell
GG 20200 Door skin
HH 20200 Repair panel, door skin
JJ 20200 Repair panel, door skin lower
KK 27840 Quarter panel
LL 27840 Repair panel, quarter panel
MM 27882 Repair panel, wheel flare
NN 27886 Wheelhouse, rear
OO 28160 Repair panel, rear door post, lower
PP 28370 Splash shield, rear wheelhouse
QQ 40700 Tailgate
RR 22800 Hinge, door
Items in blue -check listings for applications

TF =Truck Freight, OS =UPS Oversize.
See shipping information on inside back cover.

16700 LATCH, Hood



3

78-79 W/o lock, original F-16700-3 75.95



4 5

80-81 W/o lock, original F-16700-4 84.95
82-86 Non-locking, best repro F-16700-5 39.95



F-16700-6 F-16789-4A

87-96 Original F-16700-6 69.17

16789 SPRING, Hood Hinge

78-79 Repro F-16789-4A 24.95

16796/7 HINGE, Hood



F-16796-3A

78-79 RH, repro F-16796-3A 89.95
78-79 LH, repro F-16797-3A 89.95



80-96 RH, OE replacement F-16796-6 26.83
80-96 RH, repro F-16796-6A 17.95
80-96 LH, OE replacement F-16797-6 24.75
80-96 LH, repro F-16797-6A 17.95



16826 SPRING, Hood Hinge

92-96 RH, HD repro F-16826-2 29.95
92-96 LH, HD repro F-16826-3 29.95

TF =Truck Freight, OS =UPS Oversize.
See shipping information on inside back cover.



16916 HANDLE & CABLE, Hood Release Remote

80-86 ..... F-16916-3 58.33
87-91 ..... F-16916-4 50.58
92-96 ..... F-16916-5 61.75

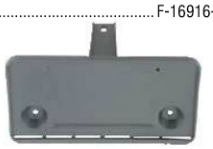

17A385 BRACKET, Front License Plate

92-96 Repro F-17A385-5 6.95



17626 VALANCE, Front

92-96 Plastic, repro, **OS** F-17626-1A 26.95

17779 DEFLECTOR, Front Bumper Stone



80-86 Original, **OS** F-17779-1 199.95
80-86 Repro, **OS** F-17779-1A 23.50



F-17779-2A
F-17779-4A
F-17779-10A

87-91 Upper, original, **OS** F-17779-2 220.80
87-91 Upper, repro, **OS** F-17779-2A 22.95
87-91 Lower, RH, original, **OS** F-17779-3 50.00
87-91 Lower, LH, original, **OS** F-17779-4 40.00
92-96 Upper, original, **OS** F-17779-10 305.57
92-96 Upper, replacement, **OS** F-17779-10A 49.95



F-02500-2R

02500/1 DOOR POST REPAIR, Front

78-79 RH, 9" tall F-02500-2R 17.75
78-79 LH, 9" tall F-02501-2R 17.75



001A06AIR DEFLECTOR, Lower Front Spoiler

87-91 Below bumper, OE style repro, **OS** F-001A06-6A 24.95



F-010128-10A



F-010128-5R/6R/9A

010128/9 ROCKER PANEL, Outer Repair

Repair section

78-79 RH, approx. 40"l x 6 1/2"h, not die stamped F-010128-6R 25.98
78-79 LH, approx. 40"l x 6 1/2"h, not die stamped F-010129-6R 25.98
80-86 RH, slip-on cover, 48" x 5.25", die stamped F-010128-7 36.95
80-86 LH, slip-on cover, 48" x 5.25", die stamped F-010129-7 36.95
80-86 RH, not die stamped F-010128-5R 19.95
80-86 LH, not die stamped F-010129-5R 19.95
87-96 RH, not die stamped F-010128-9A 37.95
87-96 LH, not die stamped F-010129-9A 37.95

OE type repro, w/door post, 48.5" x 8.75"

80-96 RH F-010128-10A 44.95
80-96 LH F-010129-10A 44.95

011135 CAB FLOOR PAN REPAIR, Front



F-011135-16R

78-79 RH, 29" wide, **OS** F-011135-16R 54.95
78-79 LH, 29" wide, **OS** F-011135-17R 54.95



F-011135-22A F-011135-22R

80-96 RH, 21"w x 30", imported F-011135-22R 38.50
80-96 LH, 21"w x 30", imported F-011135-23R 38.50
80-96 RH, 21"w x 29", US made F-011135-22A 33.95
80-96 LH, 21"w x 29", US made F-011135-23A 33.95



F-011135-18

011135 CAB MOUNT SECTION

78-96 RH, **OS** F-011135-18 36.95
78-96 LH, **OS** F-011135-19 36.95



011270/1 CAB MOUNT, Front Steel

Under floor, made as original

78-79 RH F-011270-1 84.95
78-79 LH F-011271-2 84.95

011180 INSPECTION PLATE, Cab Mount

2 reqd, use on F-011270-1, F-011271-1/2

78-79 ..... F-011180-1 9.95



20200/1 DOOR SKIN, Outer Repair Lower

78-79 RH, 27" tall F-20200-2R1 34.95
78-79 LH, 27" tall F-20201-2R1 34.95
78-79 RH, 8" tall F-20200-2R2 18.75
78-79 LH, 8" tall F-20201-2R2 18.75

20124/5 DOOR SHELL ASSY

Replacements designed to duplicate the fit and finish of the original. Truck freight



78-79 RH, repro, **TF** F-20124-7 199.95
78-79 LH, repro, **TF** F-20125-7 199.95
78-79 LH, original, limited NOS availability, **TF** F-20125-7A 299.95



80-86 RH, repro, **TF** F-20124-8 171.95
80-86 LH, repro, **TF** F-20125-8 171.95



87-91 RH, w/o swing-loc mirrors, **TF** F-20124-9 219.95
87-91 LH, w/o swing-loc mirrors, **TF** F-20125-9 219.95
87-91 RH, w/swing-loc mirrors, **TF** .. F-20124-9A 219.95
87-91 LH, w/swing-loc mirrors, **TF** .. F-20125-9A 219.95



92-96 RH, w/o paddle mirror holes, **TF** F-20124-10A 218.95
92-96 LH, w/o paddle mirror holes, **TF** F-20125-10A 218.95
92-96 RH, w/paddle mirror holes, **TF** F-20124-11A 218.95
92-96 LH, w/paddle mirror holes, **TF** F-20125-11A 218.95

20124/5 DOOR SKIN, Inner Lower Repair



78-79 RH, approx. 8" tall F-20124-7R2 34.95
78-79 LH, approx. 8" tall F-20125-7R2 34.95

TF =Truck Freight, OS =UPS Oversize. See shipping information on inside back cover.



80-96 RH, approx. 8" tall F-20124-8R2 79.95
80-96 LH, approx. 8" tall F-20125-8R2 79.95

20200/1 DOOR SKIN, Outer

Full size outer skin:

91 RH, original, **OS** F-20200-3 599.95
92-96 RH, original, use w/paddle mirrors, **OS** F-20200-4 499.95
93-96 RH, original, use w/low mount swing away mirrors, **OS** F-20200-5 500.00



Outer Repair Lower

80-96 RH, 23" tall, **OS** F-20200-3R1 99.95
80-96 LH, 23" tall, **OS** F-20201-3R1 99.95
80-96 RH, 8" tall F-20200-3R2 21.95
80-96 LH, 8" tall F-20201-3R2 21.95



28160/1 DOOR POST REPAIR, Rear

78-79 RH F-28160-1R 44.95
78-79 LH F-28161-1R 44.95



REAR BODY-1978-96


16AR


17A



27840/1 QUARTER PANEL, Outer

78-79	RH, w/o swing away, repro	F-27840-19R	204.95
78-79	RH, w/swing away spare, repro	F-27840-19AR	214.95
78-79	LH, repro	F-27841-19R	279.95
80-86	RH, w/o swing away, repro	F-27840-16R	204.95
80-86	RH, w/swing away, repro	F-27840-16AR	204.95
80-86	LH, w/single fuel door, repro	F-27841-16R	204.95
87-91	RH, w/swing away spare, original	F-27840-17A	449.95

NEW!

All full length quarter panels are truck freight.


F-27840-4R2

QUARTER PANEL REPAIR SECTION, Rear

78-79	RH, cut down for Bronco, 26" tall x 46" long	F-27840-4R2	107.95
78-79	LH, cut down for Bronco, 26" tall x 46" long	F-27841-4R2	192.50


F-27882-2R1


F-27882-2R2

WHEEL FLARE REPAIR SECTION

80-86	RH, 28" tall x 59" long	F-27882-2R1	53.50
80-86	LH, 28" tall x 59" long, w/single fuel door-modify location for Bronco	F-27883-2R1	53.50
80-86	RH, 16" tall x 39" long	F-27882-2R2	24.95
80-86	LH, 16" tall x 39" long	F-27883-2R2	24.95


F-27886-4

27886/7 WHEELHOUSE PANEL, Rear

80-86	RH, repro, **OS**	F-27886-2A	54.95
80-86	LH, repro, **OS**	F-27887-2A	54.95
87-96	RH, original, **OS**	F-27886-4	246.50
87-96	LH, original, **OS**	F-27887-4	336.83



27936 HOUSING, Fuel Filler Pipe

87-96		F-27936-3	75.00


1

28370 SPLASH SHIELD, Rear Wheel

78-79	4 reqd	F-28370-1	11.95
80-86	4 reqd	F-28370-2	74.95
87-96		F-28370-5	10.45



011117 DRAIN PLUG, Rear Floor

78-86	(b4 3/86), replacement, 2 reqd	111-1	1.99


5 6

405A26 DOOR, Fuel Filler

80-86		F-405A26-5	24.95
87-96		F-405A26-7	39.32


F-40700-12

40700 TAILGATE

80-86	Repro, w/o trim holes	F-40700-11A	329.95
83-93	Repro, w/trim holes	F-40700-12A	314.95

All above tailgates are truck freight.



40700 TAILGATE OUTER REPAIR SKIN

78-86	Lower, 10" tall	F-40700-3R2	58.50

LIFT GATE/TAIL GATE 1978-96

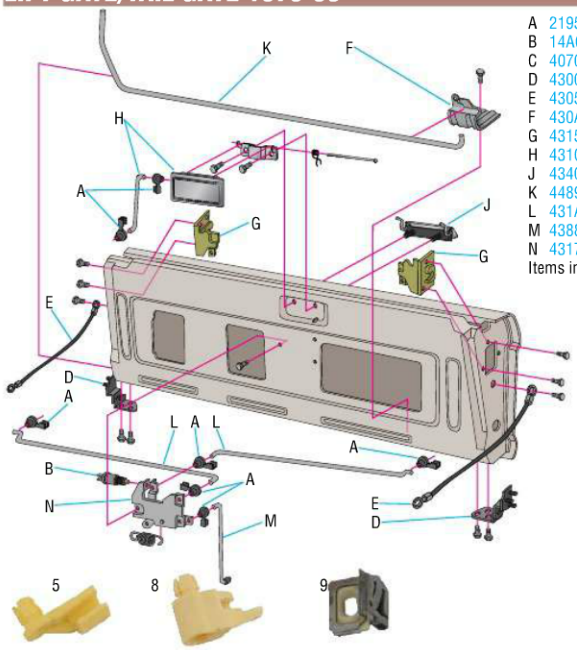

A 21952 Retainer, lock rod
B 14A011 Switch, pwr window limit
C 40700 Tailgate
D 43000 Hinge, tailgate
E 43052 Cable, tailgate check
F 430A30 Bracket, torsion bar
G 43150 Latch, tailgate
H 431C62 Handle, inside release
J 43400 Handle, outside release
K 44890 Torsion bar, tailgate hinge
L 431A78 Latch rod, tailgate
M 43884 Release rod, tailgate latch
N 43170 Release, tailgate latch
Items in blue -check listings for applications

21952 RETAINER, Lock Rod Clip

78-79	As reqd	F-21952-9	7.46
78-86	As reqd	F-21952-8	1.32
80-96	As reqd	F-21952-5	1.11

TF =Truck Freight, OS =UPS Oversize.
See shipping information on inside back cover.

14A011 SWITCH & BRACKET, Window Limit
86-96 (from 8/86), tailgate window.. F-14A011-2 75.00



430A30 BRACKET, Tailgate Counter Balance Torsion Bar
78-96 ..... F-430A30-1 14.95



43052 CABLE, Tailgate Check
78-96 2 reqd..... F-43052-3 16.95



431F52 LATCH STRIKER, Tailgate Upper
83-96 Each, on body F-431F52-2 15.47



431C62 RELEASE HANDLE, Tailgate Latch
78-96 ..... F-431C62-1 225.00
NEW! 78-96 Repro F-431C62-1A 49.95

43170 CONTROL, Tailgate Latch Remote
78-96 ..... F-43170-2 167.38
NEW! 78-96 Repro F-43170-2A 49.95

431A78 LINK RODS, Tailgate Latch Release
83-96 2 reqd..... F-431A78-6 40.78

TF =Truck Freight, OS =UPS Oversize.
See shipping information on inside back cover.





43400 RELEASE HANDLE ASSY, Tailgate
92-93 W/Nite, black..... F-43400-7 36.93

44890 TORSION BAR, Tailgate Hinge
78-96 Inside tailgate..... F-44890-1 100.00

43884 LINK ROD, Tailgate Latch Release
80-96 ..... F-43884-2 39.95

44890 TORSION BAR, Tailgate Hinge
NEW! 78-96 ..... F-44890-1 100.00

BODY MOUNTING



5400 PAD KIT, Cab Mount
66-77 Pad kit..... F-5400-8 59.95



00154 CAB MOUNT KIT, Polyurethane
Available in two colors! Please be sure to specify color choice when ordering by adding the color code letter in parentheses to the end of the part number. Black (A) red (C). Example of correct part number F-00154-4A.
66-77 16 pc set, red only available... F-00154-3C 50.95
78-79 20 pc set..... F-00154-4_ 106.95
80-96 20 pc set..... F-00154-5_ 106.95

00154 MOUNTING KIT, Cab Mount
66-77 Fits with F-00154-3C kit..... F-00154-3K 33.95



00157 RETAINER, Cab Mount
80-93 #2, lower retainer..... F-00157-2 39.00
80-88 (b4 10/88), #3, lower F-00157-2 39.00
80-89 #4, upper retainer..... F-00163-1 19.68
80-89 #4, lower retainer..... F-00157-3 32.25
80-89 #5, upper retainer..... F-00163-1 19.68
80-89 #5, lower retainer..... F-00157-3 32.25
88-93 (from 10/88), lower retainer... F-00157-2 39.00
#' refer to position of mount on the frame from front to rear. There are 4 or 5 pairs of mounting postions on a Bronco (4 on 1966-77, 5 on 1978-96).

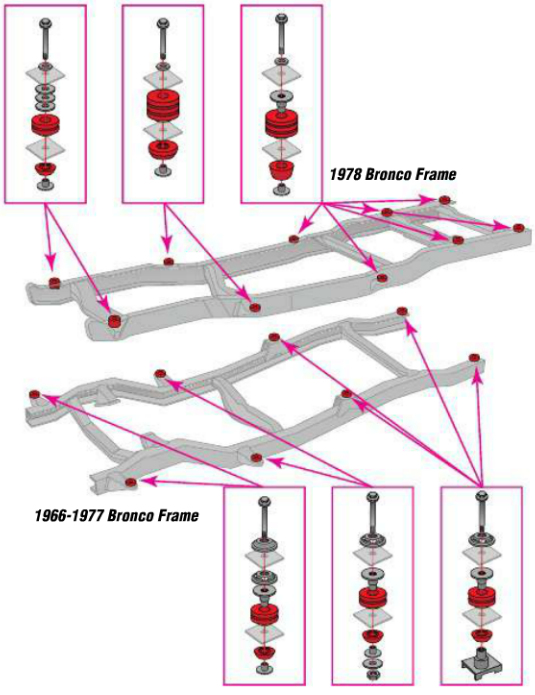

CAB BODY ACCESSORIES





GLASSCAPES™, Rear Window Graphics

Pressure sensitive material allows dry application. Trim to fit all rear window styles including sliders. Consult local laws regarding rear window tinting. Most Glasscapes™ measure 66" x 24", some are slightly larger, some smaller, depending on the graphic's requirements. DO NOT apply to windshields or front door glass!! CAUTION: Moisture from rain, snow or car washes can collect in the small perforated holes and cause temporary reduction in vision clarity to all perforated film products. Add suffix code for choosen design to the end of base number "F-442A68-__". Example for Bald Eagle: F-442A68-1C

Stars and Stripes	1A	The Patriot	1B
Bald Eagle	1C	Checkered Flag	1D
Old Dixie**	1E	Trophy Bass	1F
Woods Camo	1G	Wild Ducks	1J
Field of Deer	1K	American Iron	1L
Dragsters	1M	Wolves	1N
Hot Flames	1O	Texas Flag	1P
Wild Horses	1Q	Don't Tread On Me	1R
S/Western Desert	1S	Alpine Lake	1T
Canadian Flag	1U	Miss Red/White/Blue	1V
Lightning Storm	1W	Shark	1X
Elk Country	1Y	Wild Turkey	1Z
Pheasant	2A	Bear**	2B
Rodeo**	2C	Throughbreds**	2D
USMC Flag	2E	Star & Bars	2F

** not pictured



Stars & Stripes for SUV side windows, pair F-442A68-3A 144.95

Stars & Stripes, oversized for SUV rear windows, 66" x 36" F-442A68-4A 144.95

TF =Truck Freight, OS =UPS Oversize. See shipping information on inside back cover.





17A326TACHOMETER, Hood Mounted

66-96 Black face, original style accessory, drilling of hood required 17A326-3A 374.95

66-96 Custom white face, original style accessory, drilling of hood required 17A326-3B 374.95



Hood Deflector by Stampede Products

Wraparound style gives full hood, windshield and fender protection in one product. Aerodynamically designed with a reverse flip and full wraparound.





SIDE WIND DEFLECTOR

Protection from wind and rain while improving ventilation. No drill -installs with durable 3M Red line tape.



TAIL LIGHT COVERS

Bold raised design in ABS plastic. Installs with sturdy 3M Red line tape.



Year	Description	Hood Deflector F-16C900-___	Price	Side Deflector F-18246-___	Price	Tail light Cover F-13A450-___	Price
80-86	Smoke	60A	46.50	60A	36.95	-	
80-86	Mossy Oak Break-Up®	60J	113.50	60J	96.95	-	
80-86	Realtree Hardwoods®	60L	113.50	60L	96.95	-	
87-91	Smoke	61A	46.50	60A	36.95	-	
87-91	Mossy Oak Break-Up®	61J	113.50	60J	96.95	60J	99.95
87-91	Realtree Hardwoods®	61L	113.50	60L	96.95	60L	96.95
92-96	Smoke	62A	46.50	60A	36.95	-	
92-96	Mossy Oak Break-Up®	62J	113.50	60J	96.95	60J	99.95
92-96	Realtree Hardwoods®	62L	113.50	60L	96.95	60L	96.95
92-96	Chrome	62C	107.95	-		-	



COWL COVER

Magnetic, stops water dripping on the carpet from rusty cowl vents, easy to use, won't blow off while driving. Rolls up and stores easily in glove box. Simply lay over the cowl vent-the magnetic material keeps it in place and seals the vent!

78-79 Black F-CC900-73M 19.95
78-79 Simulated diamond plate..... F-CC900-73MD 19.95



WINDOW SHADE SET by Auto Ventshade

78-79 Pair F-18246-7 66.95
80-96 Pair F-18246-8 50.50



FLEXY FLARE, Fender Extension by Pacer Performance Products

EPDM rubber in 58" lengths

1/8" thick, 2 pc kit, adds 3" of coverage, standard duty, wire reinforced F-16K140-2A 33.75
1/8" thick, 4 pc kit, adds 3" of coverage, standard duty, wire reinforced F-16K140-2B 61.25
1/4" thick, 2 pc kit, adds 3" of coverage, heavy duty built in curvature F-16K140-1A 48.75
1/4" thick, 4 pc kit, adds 3" of coverage, heavy duty built in curvature F-16K140-1B 91.50
1/4" thick, 2 pc kit, adds 4 1/2" of coverage, heavy duty built in curvature F-16K140-3A 64.95

Exact fit series. 3" fender extension, 1/4" thick EPDM rubber, custom fit sets, adds 3" of coverage, heavy duty built in curvature, wire reinforced.

78-79 ..... F-16K140-50A 99.95
80-86 ..... F-16K140-51A 99.95
87-91 ..... F-16K140-52A 99.95
92-96 ..... F-16K140-53A 99.95

TF =Truck Freight, OS =UPS Oversize. See shipping information on inside back cover.

FENDER FLARES- FRONT OR REAR

BUSHWACKER

Street FLARES by Bushwacker

- *Unique custom design adds 3/4" tire clearance with flowing lines to match the body contours.*
- *Created for stock wheels/tires.*
- *UPS (oversize)*
- *OE black finish can be painted.*
- *Easy installation.*

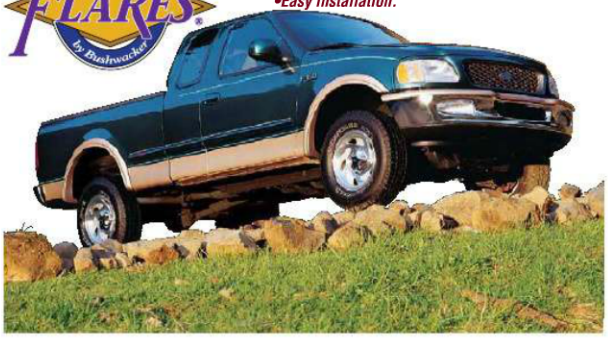

STREETFLARES™ by Bushwacker

92-96 Set of 4, 2 pc flares require assembly F-16K140-33A 341.95

BUSHWACKER Extend-A-Fender FLARES

- *Subtle protection and style!*
- *Blends smoothly with original vehicle contours.*
- *Provides 1-3" of coverage.*
- *Rivet fastener installation.*
- *No cutting of factory fenders required.*
- *Black Dura-flex® material is paintable.*
- *UPS oversize*



EXTEND-A-FENDER™ FLARES by Bushwacker

78-79 Front F-16K140-10A 198.50
78-79 Rear F-16K140-16B 198.50
78-79 Set F-16K140-16C 394.95
80-86 Front F-16K140-11A 185.50
80-86 Rear F-16K140-11B 185.50
80-86 Set F-16K140-11C 368.95
87-91 Front F-16K140-12A 182.95
87-91 Rear F-16K140-12B 185.50
87-91 Set F-16K140-12C 364.95
92-96 Front F-16K140-13A 189.95
92-96 Rear F-16K140-13B 213.50
92-96 Set F-16K140-13C 397.95

FENDER CUT-OUT FLARES by Bushwacker

- *Perfect for aggressive, extra wide and tall tires!*
- *Provides 2-5" of extension for some of the widest tire coverage available!*
- *Requires minimal cutting of factory fenders.*
- *Without any added lift kits Cut-out flares allow for approx. 12" max. rim width and 36" tire height.*
- *Black Dura-flex® material is paintable.*
- *UPS oversize*



CUT-OUT™ FLARE by Bushwacker

66-77 Front F-16K140-25A 202.95
66-77 Rear F-16K140-25B 202.95
78-79 Front F-16K140-20A 264.95
78-79 Rear F-16K140-20B 242.95
80-86 Front F-16K140-21A 255.50
80-86 Rear F-16K140-21B 243.95
87-91 Front F-16K140-22A 294.95
87-91 Rear F-16K140-22B 294.95
92-96 Front, smooth finish, no exterior rivets F-16K140-23A 265.95
92-96 Rear, smooth finish, no exterior rivets F-16K140-23B 269.50

GRILLE/FACIA BRA



FRONT END BRA

80-86	One piece custom	F-19A414-4	81.50
87-91	One piece custom	F-19A414-5	81.50
92-96	Custom 2 piece for easy hood access	F-19A414-6A	81.50

HOOD BRA, Front End

87-91		F-19A415-5	29.95
92-96		F-19A415-6	29.95

SPLASH GUARDS & MUD FLAPS



SPLASH GUARD, Running Board Style

78-96	Silver extruded aluminum, 12"w x 18"h, pr	F-16A550-11A	46.95
78-96	Brite diamond tread aluminum, 12"w x 18"h, pair	F-16A550-11C	46.95

HANGER KIT, for above running board style guards

NEW! 78-96 ..... F-16A551-1 12.50

SPLASH KIT, Black Plastic

1 6A 6B



Front or rear, black w/white "FORD", pair, 18" x 12" F-16A550-1 27.13
15" x 9", plain black, pair F-16A550-6A 11.75
18" x 12", plain black, pair F-16A550-6B 15.15

7A 7B 8A



15" x 9", "4x4" in silver, pair .. F-16A550-7A 9.60
18" x 12", "4x4" in silver, pair F-16A550-7B 10.70
15" x 9", "4x4" in silver brush stroke logo, pair F-16A550-8A 9.60



SPLASH GUARD, Contemporary

Easy installation, lifetime guarantee. Pair

Black	F-16A550-13A	15.80
Reflector	F-16A550-13B	16.60
"4x4" logo	F-16A550-13C	16.60



SPLASH GUARD, Heavy Duty Rubber

Includes rust resistant hardware, simple installation. Pair

Black, 14" x 9" F-16A550-16A 11.50

FRONT BUMPER-FACTORY STYLE

17757 BUMPER, Front



66-77	Chrome, front or rear, original Ford tooling, **OS**	F-17757-11	259.95
66-77	Chrome, front or rear, repro, **OS**	F-17757-11A	144.95
66-77	Improved chrome, front or rear, best repro, **OS**	F-17757-11C	199.95
66-77	Unpainted, front or rear, original Ford tooling, **OS**	F-17757-11B	134.95



78-79	(from 78 ser#AG0,001), chrome, w/o horiz. pad holes, original Ford tooling, **OS**	F-17757-3	324.95
78-79	Chrome, w/horiz. pad holes, repro, **OS**	F-17757-3B	99.95
78-79	(From 78 ser#AG0,001), chrome, w/o horiz. pad holes, repro, **OS**	F-17757-3A	164.95
78-79	(from 78 ser#AG0,001), low gloss black, w/o horiz. pad holes, repro, **OS**	F-17757-4	102.95

TF =Truck Freight, OS =UPS Oversize. See shipping information on inside back cover.



17752 REINFORCEMENT, Front Bumper Bracket

87-91	LH, repro	F-17752-1	15.95
87-91	RH, repro	F-17752-2	15.95

17758 BOLT, Bumper

67-77	Stainless steel cap, 1 1/4"	17758-1	0.99
80-93	Chrome	F-17758-4	7.98
90-93	Chrome, used w/rub strips	F-17758-6	1.75
66-67	8 reqd, incl nuts, stainless steel cap	17758-1	0.99

17C756 HARDWARE KIT, Bumper Bolt

87-90 Use w/17787-8 brackets, 2 reqd, rear F-17C756-1 50.00



17A792 REINFORCEMENT, Front Bumper

87-91	RH, original	F-17A792-1	100.00
87-91	RH, repro	F-17A792-1A	24.95
87-91	LH, original	F-17A792-2	100.00
87-91	LH, repro	F-17A792-2A	24.95
92-96	RH, original	F-17A792-3	28.12
92-96	RH, repro	F-17A792-3A	14.95
92-96	LH, original	F-17A792-4	28.12
92-96	LH, repro	F-17A792-4A	14.95



17A812 PAD, Front Bumper Guard

78-89 ..... F-17A812-2 15.00

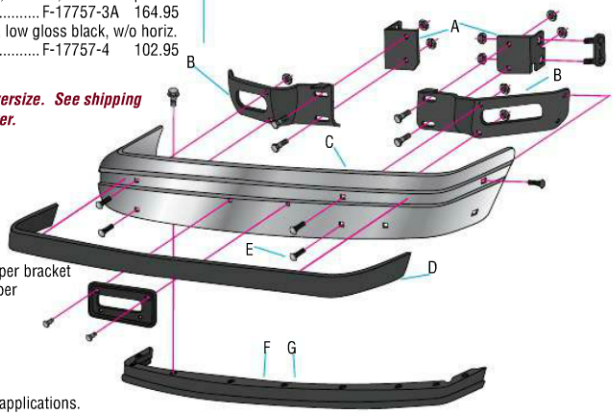

A 17752 Reinforcement, bumper bracket
B 17A792 Bracket, front bumper
C 17757 Bumper
D 001A06 Air dam, front
E 17758 Bolt, bumper
F 17C829 Pad, front bumper
G 17K833 Pad, front bumper
Items in blue- check listing for applications.



F-17K833-2

17K829/33/34 PAD ASSY., Front Bumper

80-86	Center, inner, RH	F-17K829-2A	19.95
80-86	Center, inner, LH	F-17K829-2B	19.95
80-86	Outer RH, **OS**	F-17K833-2	29.95
80-86	Outer LH, **OS**	F-17K834-2	29.95
87-91	Black, original	F-17C829-3	52.73
87-91	Black, repro	F-17C829-3A	23.95
92-93	Black, repro	F-17C829-4A	17.25
95-96	Center, Eddie Bauer or XLT, orig., **OS**	F-17K833-5	38.58
95-96	Center, Eddie Bauer or XLT, repro, **OS**	F-17K833-5A	29.95
95-96	RH, Eddie Bauer or XLT, orig., **OS**	F-17K833-6	39.58
95-96	RH, Eddie Bauer or XLT, repro, **OS**	F-17K833-6A	23.95
95-96	LH, Eddie Bauer or XLT, orig., **OS**	F-17K833-7	39.58
95-96	LH, Eddie Bauer or XLT, repro, **OS**	F-17K833-7A	23.95
92-96	Black, repro, orig., **OS**	F-17K833-4	52.47
92-96	Black, repro, repro, **OS**	F-17K833-4A	21.75

17996 BUMPER GUARD

NEW! 66-77	Chrome, repro, fits front or rear bumpers, pair	F-17996-6	74.95



F-17A861-1

17997 PAD, BUMPER GUARD,

78-86	Seals bumber guard to bumper to prevent scratches, 4 pc set (does 2 guards)	F-17997-3A	7.95

17A861/2 FILLER, Original Front Bumper

92-96	RH, repro	F-17A861-1	11.95
92-96	LH, repro	F-17A861-2	11.95

REAR BUMPER-FACTORY STYLE

Some bumpers are too large for UPS and will need to be shipped by Truck Freight.

17787/8/95/6 ARM, Rear Bumper

90-94	W/step bumper, inner LH	F-17788-10	79.92
90-94	W/step bumper, outer RH	F-17795-6	15.37
90-94	W/step bumper, outer LH	F-17796-6	14.13



17B807 PAD, Rear Factory Step Bumper

87-96	Upper, black, **OS**	F-17B807-4	77.82



F-17K831-2

17K831/2 PAD, Rear Factory Bumper

87-91	RH	F-17K831-2	23.27
87-91	LH	F-17K832-2	24.98

17996 BUMPER GUARD

NEW! 66-77	Chrome, repro, fits front or rear bumpers, pair	F-17996-6	74.95



17984 BUMPER GUARD, Rear Factory

78-79	Chrome w/pad, pair, original Ford tooling	F-17984-2	119.95

17997 PAD, BUMPER GUARD,

78-86	Seals bumber guard to bumper to prevent scratches, 4 pc set (2 guards)	F-17997-3A	7.95

17906 BUMPER, Rear Factory Style



66-77	Chrome, front or rear, original Ford tooling, **OS**	F-17757-11	259.95
66-77	Chrome, front or rear, repro, **OS**	F-17757-11A	144.95
NEW! 66-77	Improved chrome, front or rear, best repro, **OS**	F-17757-11C	199.95
66-77	Unpainted, front or rear, original Ford tooling, **OS**	F-17757-11B	134.95



78-79	Painted, repro, **OS**	F-17906-32	161.95
78-79	Chrome, repro, **OS**	F-17906-32A	194.95
NEW! 78-79	Wide frame rails 37 1/2" between rails, improved chrome, best repro, **OS**	F-17906-32C	199.95



80-86	Chrome, repro, **OS**	F-17906-3A	187.95
80-86	Painted, repro, **OS**	F-17906-3B	139.95
80-86	Step, chrome, w/horiz. pad holes, **OS**	F-17906-5	149.95

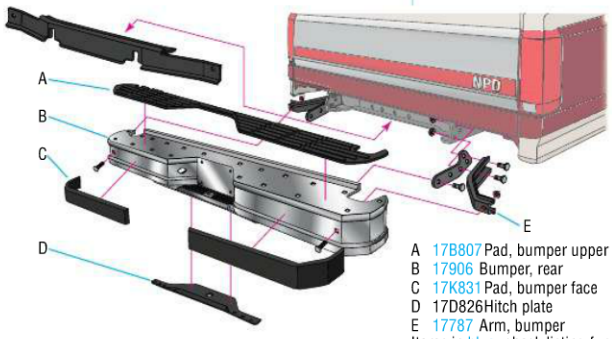

A 17B807 Pad, bumper upper
B 17906 Bumper, rear
C 17K831 Pad, bumper face
D 17D826 Hitch plate
E 17787 Arm, bumper
Items in blue- check listing for applications.



92-96	Step, argent, original, paint to match, **OS**	F-17906-17	625.03
92-96	Step, chrome, step, original, **OS**	F-17906-16	1141.13

REAR BUMPER-AFTERMARKET



BUMPER, Rear Diamondstep

Traditional utility bumper with embossed steel step plate, famous for function and reliability. 12 ga. cold rolled bright steel face channel provides optimum surface for superior strength. Ribbed design adds to appearance and bumper strength. 7 ga. hitch plate is made from ASTM specified High Strength Material and includes an arc welded hitch stiffener for added strength. Installation requires no drilling and is tow ready for 8,000 lbs.

78-96	Black powder coat	F-17906-40A	181.95
78-96	Silver powder coat	F-17906-40B	179.95
78-96	Chrome	F-17906-40C	277.95



BUMPER, Rear Surestep

Classic step bumper with molded polymer step pad for sure footing. 12 ga. cold rolled bright steel face channel with ribbed design provides optimum surface for superior strength. Black UV resistant step pad will not fade under harsh conditions. 7 ga. hitch plate assy is made from ASTM specified high strength material and includes welded hitch stiffener for added strength. Center hole accepts 1" ball shaft.

78-96	Silver powder coat	F-17906-41B	234.95
78-96	Chrome	F-17906-41C	315.95



BUMPER, Rear Surestep Deluxe XLT

Same great features as the Surestep but utilizes a wrapped step pad for a different look and increased top edge protection. No drilling and tow ready for 8000 lbs.

78-96	Chrome	F-17906-43C	328.95

17906 MOUNTING KIT, Rear Fey

79-96	For bumpers listed above	F-17906-41K	43.95

GRILLE GUARDS



GRILLE GUARDS by DeeZee

Rugged and stylish guard covers the head lights and vertical support is heavy gauge steel with a UV protected PVC bumper pad. Truck freight.

92-96	Ultra Black	F-17996-61C	389.95

CARGO NETS & BAGS





STORAGE NET

Bulkhead Mount

Nylon mesh net stretches 48-60" x 12" deep, adhesive installation, lifetime guarantee F-55066-4 19.80

Side Pocket Mount

Nylon mesh net stretches 30-36" x 12" deep, adhesive installation, lifetime guarantee F-55066-5 16.95

Hammock Mount

Nylon mesh net stretches 45-60" x 12" deep, adhesive installation, lifetime guarantee F-55066-6 23.50



BACK PACK, Roof Top Storage System

Standard size 38"l x 38"w x 18"h (13 cu ft), Weather resistant water repellant nylon with seam binding. Attaches quickly with straps to luggage racks or rooftops. 4 polypropylene web straps with Delrin connectors keep back pack secure to the vehicle. No drilling and easy to use. Full-length 2 way zippers provide easy access to cargo. Soft heavy-duty neoprene pad protects vehicle finish.

66-96 ..... F-19B507-1 75.95

TOW HOOKS & STRAPS



17N808TOW HOOK KIT, Aftermarket

Chrome hooks w/spring clip. 10000# capacity, each F-17N808-2A 12.80

00067 TOW ROPE/TOW STRAP



Rope style w/zinc plated hooks, 5000#max. capacity, 15' long..... F-00067-1 13.85



Strap style w/zinc plated hooks, 10000# max. capacity, 1 3/4" x 25', re-usable clamshell package F-00067-3 24.95





00068 TIE DOWN, Cam-Buckle Style

1" x 6', 1200# load capacity, non-slip cam-buckle latch, heat treated and vinyl coated steel hooks, Great length for motorcycles, ATV's, watercraft or any other items you need to tie down in your bed.

Power Web Plus™, 1300#, orange, improved strength with heavier duty hardware, pair.... F-00068-1A 19.95

HITCH-HAUL, CARRIER RACK



ORIGINAL HITCH-HAUL®

Black powder coated for a durable finish. All steel construction. Expanded metal mesh floor. 12 tie down holes. Pre-punched holes for genuine Hitch-Haul® accessories.

60" wide, reqs 1 1/4" receiver, 300# capacity, **OS** F-19F500-1 113.95

60" wide, reqs 2" receiver, 500# capacity, **OS** F-19F500-2 108.95

48" wide, reqs 1 1/4" receiver, 300# capacity, **OS** F-19F500-7A 79.95

48" wide, reqs 2" receiver, 500# capacity, **OS** F-19F500-7B 79.95

HITCH-HAUL® LITE

All aluminum construction makes this unit 40% lighter than the original Hitch-Haul®. Requires 2" receiver. 500# capacity. 60" wide deck. Powder coated finish. Expanded metal mesh floor. 12 tie down holes. Pre-punched holes for genuine Hitch-Haul® accessories.

Black, **OS** F-19F500-9A 97.95

Silver, **OS** F-19F500-9B 168.50

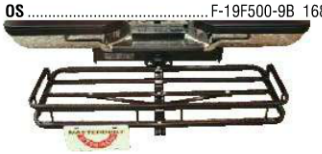

Tubular carrier rack, 48" wide, reqs 1 1/4" receiver, 300# capacity, black powder coated, **OS** F-19F500-8A 59.95

Tubular carrier rack, 48" wide, reqs 2" receiver, 300# capacity, black powder coated, **OS**.. F-19F500-8B 107.95

TF =Truck Freight, OS =UPS Oversize.
See shipping information on inside back cover.

HITCH HAUL® ACCESSORIES:



Bike rack, 3 hoop rack holds 3 bikes stable while loaded, less straps..... F-19F500-3 39.95

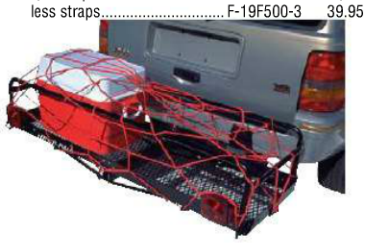

Side rail kit, allows for high stacking without the worries F-19F500-5 62.50

Tail light kit w/harness, reqd when high-stacked loads hide vehicle tail lights-be safe! Pair of lights w/harness F-19F500-4 23.50

Web kit, bungee cord style tie downs with hooks secure your load..... F-19F500-6 14.50



Weather Shield Cargo Bag, fits 60" Hitch-Hauls®. Keeps gear dry and out of sight..... F-19F500-11 39.95



Folding Receiver Bar, Fits 2" Hitch-Hauls®. Easily folds Hitch-Haul® for towing or traveling over rough terrain. 250# capacity.
..... F-19F500-12A 53.50

CARGO BARS



CARGO BAR

Stops cargo from shifting. Adjusts from 54" to 70" with rubber footpads on each end. Works equally well in beds and interiors.

Screw expanding type..... F-19A413-1 25.65

Ratchet expanding type..... F-19A413-2 31.95

RECEIVER HITCH

RECEIVER CAP, Trailer Hitch



"FORD" oval logo, 2" F-19520-5 24.95

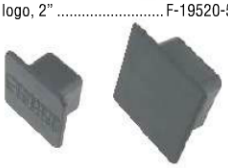

Square black plastic, friction fit, 1 1/4" F-19520-2A 1.50
Square black plastic, friction fit, 2" F-19520-2B 1.95



Black plastic, pin mount, 2" F-19520-3A 2.95
Chrome plastic, pin mount, 2" F-19520-3B 10.95
Chrome steel, pin mount, 1 1/4" F-19520-4A 8.50
Chrome steel, pin mount, 2" F-19520-4B 8.50

RECEIVER LOCK, Hitch



3 4

With weather proof padlock, Protective coated case hardened steel shackle. Tough thermoplastic jacket on lock w/keyhole cover.

5/8" pin for 2" receiver F-19521-3 10.50

With built in lock, prevents theft, easy to use quick lock system, plated steel pin.

1/2" pin fits 1 1/4" receiver F-19521-4A 21.95
5/8" pin fits 2" receiver F-19521-4B 21.95



NEW! 5/8" pin fits 2" receiver, combination lock F-19521-2 12.95

RECEIVER LOCK, Trailer



Guards against theft of unhitched trailers, shields coupler, virtually indestructible, key lock

1 7/8" coupler F-19524-1A 29.95
2" coupler F-19524-1B 57.95
2 5/16" coupler F-19524-1C 59.95



COVER, Hitch Ball

Durable, pliable plastisol, fits 1 7/8" and 2" balls, keeps grease off clothing!

Black, w/4 plug holder built in! F-19523-1 2.50
Black F-19523-1A 1.99



CONVERT-A-BALL

Patented hex shank reduces pressure on X-pin, ideal for multi-trailer users, no tools reqd to change ball sizes. Wrench flats on shank allow for easy installation. Chrome plated:

3/4" shank, 1 7/8" & 2" balls, 5000# rated F-19503-1 35.50
1" shank, 1 7/8", 2" balls, 8000# rated F-19503-3 37.95
1" shank, 2" & 2 5/16" balls, 8000# rated F-19503-4 40.75
1" shank, 1 7/8", 2" & 2 5/16" balls, 8000# rated F-19503-2 50.50

Stainless Steel:

3/4" shank, 1 7/8" & 2" balls, 5000# rated F-19503-1A 60.95
1" shank, 1 7/8", 2" balls, 8000# rated F-19503-3A 62.50
1" shank, 2" & 2 5/16" balls, 8000# rated F-19503-4A 69.50
1" shank, 1 7/8", 2" & 2 5/16" balls, 8000# rated F-19503-2A 86.95

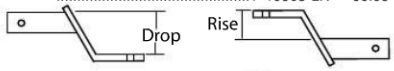



Strong-rated at 10000# GTW and 2000# TW! Special inner sleeve (shown in red) with high density polyurethane bushings at front and rear of pin hole sleeve reduce the shock transmitted from trailer to vehicle making for a smoother ride.

RECEIVER BALL MOUNT, Cushioned

Provides a smoother ride by reducing jolts and jerking, fits 2" receiver, Class 4 10,000# GTW, 2000# TW, V-5 rated dafe, black finish, 1" shank hole.

2" drop, 3/4" rise F-19522-1A 64.50
4" drop, 2" rise F-19522-2A 67.75
6" drop, 4" rise F-19522-3A 69.50
8" drop, 6" rise F-19522-3C 70.95

BALL MOUNT, Receiver Rigid

Fits 2" receiver, 1" dia. ball hole. All steel with unusually strong welds.

2" drop, 3/4" rise, 6000# GTW F-19522-4A 17.95
4" drop, 2" rise, 6000# GTW F-19522-4B 20.50
6" drop, 5" rise, 6000# GTW F-19522-4C 29.95
8" drop, 6 3/4" rise, 5000# GTW F-19522-4D 38.95
11" drop, 9" rise, 3500# GTW F-19522-4E 49.95

Pintle Hook & Mount



PINTLE HOOK

Drop forged, tethered lock pin, 1 3/4" x 3 3/8" bolt centers, 10,000# GTW, 2000# vert. wt F-19503-5A 49.95

PINTLE MOUNT

2", multi-height adjustment, 10,000#GTW, fits F-19503-5A pintle hook

8" shank, 7" plate F-19522-5A 51.50
10" shank, 7" plate F-19522-5B 46.95



Special inner sleeve with high density rubber bushings at front and rear of pin hole sleeve reduce the shock transmitted from trailer to vehicle making for a smoother ride.

PINTLE MOUNT, Cushioned

Receiver hitch, 2", provides a smoother ride by reducing jolts and jerking, fits 2" receiver, 10,000# GTW, 1000# TW, black finish, fits F-19503-5A pintle hook

3 multi-height adjustments F-19522-5C 86.95
4 multi-height adjustments F-19522-5D 108.95



Locks trailer on or off vehicle, pick-resistant, solid cast, heat-treated metal, will not rust, clog, or freeze, by Fulton.

..... F-19524-2 13.95

By Master Lock. Guards trailer on or off vehicle, high security pin tumbler lock, case hardened steel shackle, revolving shackle guard.

..... F-19524-3 15.95

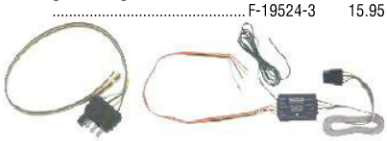

WIRE LEAD, 4-Flat Trailer

Large connector with bonded and color coded wires, 18" long

..... F-13A576-1A 2.75

WIRE, Trailer Convertor Harness

Converts std. non-trailer towing optioned trucks with separate turn and stop lights to work with 4-flat wire connector, proven reliability, solid state.

..... F-13A409-1A 20.95

F-14489-2A F-14489-2B
F-14489-1A F-14489-1B



F-14A209-1B



CONNECTORS, 7 Way, Trailer Towing

Socket

Metal F-14489-1A 25.10
Plastic F-14489-1B 19.95

Plug

Metal F-14489-2A 5.95
Plastic F-14489-2B 5.95

Bracket

Zinc Plated F-14A206-1A 1.95
Black F-14A206-1B 1.95



CIRCUIT TESTER, Trailer

4-flat wire harness, easy to use, plug into trucks wire extension, handy.

..... 981-1 4.25

WINDSHIELD

03100 GLASS, Front Windshield

66-77 Sun band, w/o mirror bracket, PPG F-03100-9 299.95
66-77 Clear, repro F-03100-9C 129.95
66-77 Tinted, repro F-03100-9T 138.95
78-79 Sun band F-03100-6 228.95
80-86 Sun band F-03100-7 159.95
87-93 Sun band, Carlite F-03100-8 159.95
94-96 Sun band, w/VIN notch, Carlite F-03100-12 119.95

Tinted windows are 73% light transmitting . Original Ford or Carlite brand as noted, otherwise "PPG", "LOF" or other brands. All glass is shipped by truck freight.

VENT WINDOW



21408 RETAINER, Door Vent Window

80-86 RH F-21408-3 20.53
80-86 LH F-21409-3 21.72
87-91 RH, w/o mirror holes, incl division bar and w/strip F-21408-4 125.70
87-91 LH, w/o mirror holes, incl division bar and w/strip F-21409-4 122.20
92-96 RH, incl division bar and weatherstrip F-21408-5 226.05
92-96 LH, incl division bar and weatherstrip F-21409-5 225.97

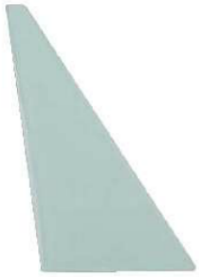

21412 GLASS, Vent Window

66-77 Clear F-21412-11C 38.50
66-77 Tinted F-21412-11T 39.95
66-77 Smoked F-21412-11S 49.95

Tinted windows are 73% light transmitting and smoked windows are 44% light transmitting. Check local laws regarding allowable light transmittal values. Laminated safety glass.

21608/9 FRAME, Vent Window

78-79 RH, painted, less glass and handle ..... F-21608-5 CALL
78-79 LH, painted, less glass and handle ..... F-21609-5 CALL



21610/1 LOWER PIVOT, Vent Frame

66-77 RH F-21610-1 14.95
66-77 LH F-21611-1 14.95



22916/7 HANDLE, Vent Window

66-67 Beautiful chrome w/pin and spring washer 22916-7-2A 25.95
NEW! 68-69 RH, repro, w/o nylon tip 22916-3A 12.95
NEW! 68-69 LH, repro, w/o nylon tip 22917-3A 12.95
70-77 (b4 77 ser#Y00,001), pair, best repro, nylon tip 22916-7-3A 34.95
78-79 (b4 79 ser#BJ0,001), RH, bright finish, replacement for late 78-79 ..... F-22916-7 29.95
78-79 (b4 79 ser#BJ0,001), LH, bright finish, replacement for late 78-79 ..... F-22917-7 29.95
80-96 RH F-22916-9 14.95
80-96 LH F-22917-9 14.95

1978-96
A 20708 Weatherstrip, body
B 21410 Glass, door window
C 21412 Glass, vent window
D 21448 Weatherstrip, vent window
E 21452 Weatherstrip, door belt, outside
F 21456 Weatherstrip, door belt, inside
G 21455 Weatherstrip set, door belt
H 21460 "Anti-rattle" kit, door window
J 21536 Run, door glass upper
L 21546 Run, door glass division bar
M 21408 Frame, vent window
P 222A00 Channel run, door glass rear
Q 22916 Handle, vent window
R 20518 Weatherstrip, door top
S 21458 Channel, door glass retainer
T 21408 Weatherstrip, vent window
U 21608 Frame, vent window
V 23394 Motor, power window
W 234A42 Gear, power window motor
X 23200 Regulator, manual window
Y 23208 Regulator, power window
Z 23342 Handle, window crank
AA 22404 Handle, outside door
BB 22008 Striker, door latch
CC 21812 Latch, door
DD 23240 Roller, window channel
EE 23370 Plate, window handle
FF 22624 Spring, window handle
Items in blue -check listings for applications
Items in red -can be found in the weatherstrip section

1966-77
A 20708 Weatherstrip, door
B 21410 Glass, door window
C 21412 Glass, vent window
D 21448 Weatherstrip, vent window
E 21450 Weatherstrip, vent division bar

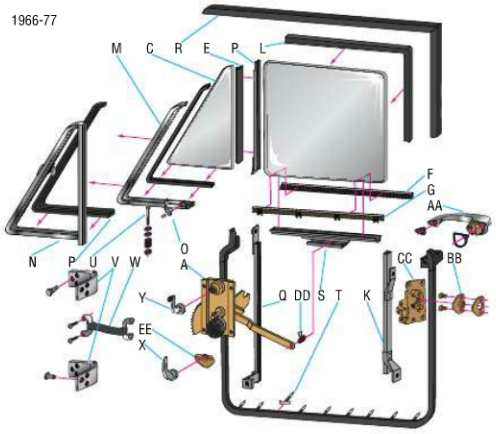

F 21452 Weatherstrip, door belt, outside
G 21456 Weatherstrip, door belt, inside
H 21455 Weatherstrip set, door belt
J 21460 "Anti-rattle" kit, door window
K 21508 Run, door glass lower, lock side
L 21596 Channel, door glass run upper
M 21608 Frame, vent window
N 22204 Frame, vent window outer
O 22916 Handle, vent window
P 223A48 Division bar, upper, hinge side
Q 233A54 Division bar, lower, hinge side
R 51222 Weatherstrip, roof side rail
S 21458 Channel, door glass retainer
T 20586 Retainer, door weatherstrip
U 21610 Pivot, vent frame, lower
V 22810 Hinge, door
W 23574 Strap assy, door check
X 22600 Handle, door release
Y 23342 Handle, window crank
Z 23200 Regulator assy, window
AA 22404 Handle, outside door
BB 22008 Striker, door latch
CC 21812 Latch, door
DD 23240 Roller, window channel
EE 21818 Remote control, door release
Items in blue -check listings for applications
Items in red -can be found in the weatherstrip section

1978-96

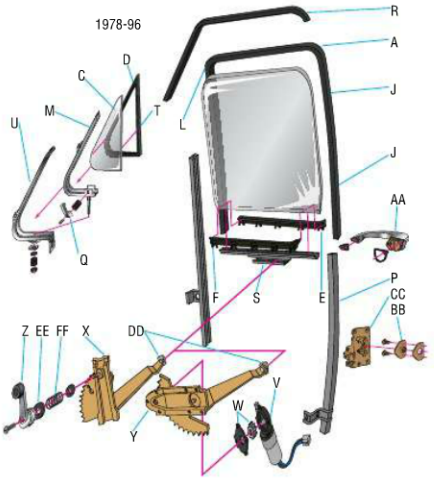

TF =Truck Freight, OS =UPS Oversize. See shipping information on inside back cover.



22920/1 BUTTON KIT, Vent Window Handle

80-96		F-22920-3	5.47



22938/9 BRACKET & HANDLE SHAFT, Vent

66-77	RH	F-22938-5	14.95
66-77	LH	F-22939-5	14.95

DOOR WINDOW



21410 GLASS, Door Window

66-77	Clear	F-21410-11C	59.50
66-77	Tinted	F-21410-11T	62.95
66-77	Smoked	F-21410-11S	78.95

Tinted windows are 73% light transmitting and smoked windows are 44% light transmitting. Check local laws regarding allowable light transmittal values. Laminated safety glass.

214A10 SEAL STRIP, Glass Channel

66-96	1/16" TK, 4' length (window reqs about 40", vent window 28")	214A10-1	3.95

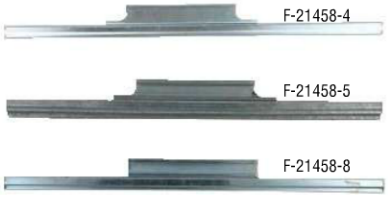

21458/9 CHANNEL, Door Window Lift

66-77	Fits RH or LH, repro	F-21458-8	19.95
78-79	RH, limited NOS original stock availability	F-21458-4A	49.95
78-79	RH, repro	F-21458-4	29.95
78-79	LH, repro	F-21459-4	29.95
80-96	Fits RH or LH, repro	F-21458-5	31.85



23208 POWER WINDOW CONVERSION KIT

66-77	12v, universal kit, incl power lifts and regulators, switches sold separately	F-23208-1K	304.95
80-96	Custom fit, switches sold separately	F-23208-4K	346.95



14528 SWITCH KIT, Power Window

Kits include switches, wiring and plugs for window handle hole.

66-96	2 dr, chrome switches and bezel	14528-2A	133.95

See "Interior Door" section for original power window switches.



23200/1 REGULATOR, Door Window

		LH	RH	Price each
66-77	Repro, m	F-23201-15A	F-23200-15A	84.95
78-79	Original, m	F-23201-5	F-23200-5	99.95
78-79	Repro, m	F-23201-5A	F-23200-5A	29.95
80-91	Original, m	F-23201-6	F-23200-6	129.64
80-91	Repro, m	F-23201-6A	F-23200-6A	79.95
80-86	Repro, p	F-23209-4A	F-23208-4A	72.50
92-96	Original, m	F-23201-8	F-23200-8	170.96
92-96	Repro, m	F-23201-8A	F-23200-8A	61.95
92-96	Repro, p	F-23209-8A	F-23208-8A	61.95

p=power (less motor), m=manual



23240 ROLLER ASSY, Door Window Regulator

66-79	Each	23240-1AK	0.75
78-96	Each	F-23240-3	7.88



23394/5 MOTOR, Power Window, Rebuilt

Note that the factory often switched RH and LH motors- see photos for identification. Prices and core charges are listed per motor. These motors are rebuilt original Ford motors that were very specific in their application as opposed to the new motors which are more generic replacement parts. New motors shown are replacements that work for all variations.

80-96	LH, NEW, replacement	23395-1	99.95
80-96	RH, NEW, replacement	23394-1	99.95
80-81	(b4 10/80), LH, core chrg $80	F-23394-1	54.95
80-81	(b4 10/80), RH, core chrg $80	F-23394-1	54.95
81-86	(from 10/80), LH, core chrg $80	F-23395-2	56.95
81-86	(from 10/80), RH, core chrg $80	F-23394-2	56.95
87-88	LH, core chrg $80	F-23394-1	54.95
87-88	RH, core chrg $80	F-23394-1	54.95
89-92	(b4 5/92), LH, core chrg $80	F-23395-2	56.95
89-92	(b4 5/92), RH, core chrg $80	F-23394-2	56.95
92-95	(from 5/92), LH, core chrg $80	F-23395-4	56.95
92-95	(from 5/92), RH, core chrg $80	F-23394-4	56.95
96	LH, core chrg $80	F-23395-5	56.95
96	RH, core chrg $80	F-23394-5	56.95



234A42GEAR, Power Window Regulator

Incl rollers, repairs stripped gears. Verify spline count before ordering.

78-90	45 spline, 9 tooth gear	234A24-1	26.95
89-96	62 spline, 9 tooth gear	F-234A24-1	22.95



234A25TORQUE PIN KIT, Power Window Regulator Drive Gear

(3), used with 234A24-1 & F-234A42-1, act as a shock absorber when window is activated-age and usage cause these to crack

89-96		234A25-1	4.95

DOOR HINGE



22800/1/10/11 HINGE ASSY, Door

66-77	Reverse pin for LH side usage, 4 reqd, fits all positions (RH/LH, Upper/Lower)	F-22800-5	119.95
66-77	RH, 2 reqd, repro	F-22800-5A	49.95
66-77	LH, 2 reqd, repro	F-22801-5A	49.95
80-96	Upper, RH	F-22811-4	83.48
80-96	Upper, RH, repro	F-22811-4A	49.95
80-96	Upper, LH	F-22810-4	93.13
80-96	Upper, LH, repro	F-22810-4A	49.95
80-96	Lower, 2 reqd, fits either side	F-22800-4	148.68
80-96	Lower, repro, 2 reqd, fits either side	F-22800-4A	49.95



Stainless steel, incl 4 stainless hinges, 2 straps with stainless brackets, I-brackets and hardware, hinges and brackets are highly polished.

66-77	W/removable doors	F-22800-5BK	294.95



22840 PIN/CLIP, Door Hinge

66-77	Has oil grooves	F-22840-1	2.00
66-77	Stainless steel	F-22840-1B	3.65
78-79	Pin, cut to length NEW!	43030-1	3.32
80-96	Pin, use with F-43030-4A clip	F-43030-4	1.95
80-96	Clip, use with F-43030-4 pin	F-43030-4A	3.95



22840 PIN & BUSHING KIT, Door Hinge

NEW!	78-79	4 pins, 8 bushings	F-22811-3K	22.95
	80-96	Door, 1 pin, 2 bushings, 1 clip	F-22840-4A	4.50



22841 BUSHING, Door Hinge

78-79	2 reqd	F-22841-3	2.16
80-96		F-22841-2	2.05

23519 ROLLER, Front Door Hinge

85-86		F-23519-1	3.49



23574 STRAP, Door Check

66-77	Black cloth, each	F-23574-1	7.50
66-77	Black cloth like original, stainless steel brackets and screws, pair	F-23574-1A	19.95

DOOR LATCH/RELEASE



21812/3 LATCH, Door

66	RH, NOS original, limited availability	F-21812-11	169.95
67	RH, NOS original, limited availability	F-21812-12	169.95
66-67	LH, NOS original, limited availability	F-21813-12	169.95
78-79	RH, original	F-21812-2	61.47
78-79	RH, repro	F-21812-2A	59.95
78-79	LH, original	F-21813-2	58.50
78-79	LH, repro	F-21813-2A	59.95
82-91	RH, original	F-21812-2	61.47
82-91	RH, repro	F-21812-2A	59.95
82-91	LH, original	F-21813-2	58.50
82-91	LH, repro	F-21813-2A	59.95
92-96	RH, original	F-219A64-1	140.78
92-96	LH, original	F-219A65-1	129.82

219B64CABLE, Door Latch Acuator

92-96	Replacement, fits RH or LH	F-219B64-1	17.95



21818/19 CONTROL ASSY, Door Latch Remote

66-67	RH	21818-1A	14.95
66-67	LH	21819-1B	14.95
68-77	RH, repro	F-21818-6	19.95
68-77	LH, repro	F-21819-6	19.95

21819 MOUNTING KIT, Door Latch Remote Control

66-67	Concours, 6 pc	21819-1AK	3.00



218A42 ACTUATOR, Door Lock

87-91	Front door, power, replacement	F-218A42-1	92.50
94-96		F-218A42-3	87.27

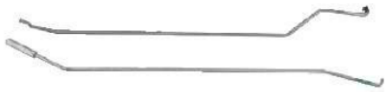

21852/3 LOCK ROD, Door Lock Button

80-81		F-21853-1	11.95
82-86	RH	F-21852-2	CALL
82-86	LH	F-21853-2	11.95



21952 RETAINER, Door Latch Rod

66-75	12 reqd, all plastic	21952-1	1.95
66-75	12 reqd, plastic and metal as original	21952-1A	4.50
77-79	Color green/white	F-21952-8	1.32
78-79	As reqd	F-21952-9	7.46
78-79	All plastic	21952-2	1.95
78-79	Plastic and metal as original	21952-2A	5.95
80-83	Door latch to cylinder, upper, 2 reqd, yellow color	F-21952-5	1.11
80-89	Door latch, lower, as reqd	F-21952-9	7.46
84-86	Door latch to cylinder, upper, 2 reqd, color green/white	F-21952-8	1.32
87-89	Door latch to cylinder, upper, 2 reqd, yellow	F-21952-5	1.11
88-89	(from 5/88), tailgate latch, 2 reqd, yellow	F-21952-5	1.11

STOP

Throughout this catalog notations of "RH" (right hand) indicate the Passenger side, notations of "LH" (left hand) indicate the Drivers side.



22008/9 STRIKER PLATE, Door Latch

66-67		22008-1A	12.50
68-77	Replacement	22008-2	9.95
68-77	Repro, date coded "11/67"	22008-2B	14.95
78-79		22008-3	7.50
80-96		F-22008-8	8.50



22008 BOLT KIT, Striker Plate

66-77	Replacement style, 4 pc, zinc	22008-1K	2.00
66-77	Replacement style, 4 pc, stainless	22008-2K	3.00
66-77	Exact posi-drive style, 4 pc, zinc	22008-2AK	3.00

22168/9 LOCK CONTROL ASSY, Door

NEW!	80	RH, black	F-22168-1A	37.15
NEW!	80	LH, black	F-22169-1A	37.98

22404/5 OUTSIDE HANDLE, Door



66-77	RH, handle only, no button or kit, original Ford tooling	22404-1	62.95
66-77	LH, handle only, no button or kit, original Ford tooling	22405-1	62.95
66-77	Repro, pair, excellent quality, inc's buttons	22404-5-1	35.50
66-77	Best repro, best chrome (2 yr mfgr warr), US made, handle and button only, no mechanism	22404-5-1A	57.95



78-79	RH, repro	F-22404-5A	19.95
78-79	LH, original	F-22405-5	69.95
78-79	LH, repro	F-22405-5A	19.95



80-96	RH, bright, original	F-22404-6	181.48
80-96	RH, bright, repro	F-22404-6A	21.95
80-96	LH, bright, original	F-22405-6	172.45
80-96	LH, bright, repro	F-22405-6A	21.95



80-96	RH, black, repro	F-22404-9A	18.50
80-96	LH, black, repro	F-22405-9A	18.50

22454 BUTTON ASSY, Outside Door Handle



66-77		22454-1	17.50
80-96	Each	F-22454-4	32.70



DOOR LOCK

For lock cylinders see LOCK section.



218A42ACTUATOR, Power Lock

87-91	Front door, power, replacement	F-218A42-1	92.50
94-96		F-218A42-3	87.27

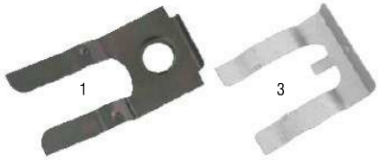

22023 RETAINER, Door Lock Cylinder

66-77	Door and tailgate, 2-3 reqd	22023-1	4.50
78-96		22023-3	4.88

REAR WINDOW



29726 GLASS, Rear Quarter Window

66-77	Clear	F-29726-11C	69.95
66-77	Tinted	F-29726-11T	73.95
66-77	Smoked	F-29726-11S	92.50

Tinted windows are 73% light transmitting and smoked windows are 44% light transmitting. Check local laws regarding allowable light transmittal values. Laminated safety glass.



42006 GLASS, Rear Window

66-77	Body 97 pickup	F-42006-11AC	93.50
66-77	Body 97 pickup	F-42006-11AT	99.95
66-77	Body 97 pickup	F-42006-11AS	124.95
66-77	Body 98 wagon	F-42006-11C	103.95
66-77	Body 98 wagon	F-42006-11T	109.95
66-77	Body 98 wagon	F-42006-11S	138.95

Tinted windows are 73% light transmitting and smoked windows are 44% light transmitting. Check local laws regarding allowable light transmittal values. Laminated safety glass.



44000 REGULATOR, Tailgate Window

80-96	Power, incl motor	F-44000-2	399.72

FENDER, HOOD, FIREWALL, COWL

Gaskets and seals not found here may be found with the assemblies they seal. i.e. license lens gaskets may be found with the license lenses.



GROMMET, Rubber

78-79 5/8", rear upper fender below 16740, pair 376996-S 4.95
78-79 5/8", on firewall, pair..... 376996-S 4.95
78-79 Front fender rear, 5/8" O.D., on top just below 16740 seal, pair 376996-S 4.95
NEW! 78-79 On fender rear at lip to apron, 2 reqd, 5/8" hole 376966-S 0.75
78-79 On fender front, top below lip at apron, 2 reqd, 1 1/2 hole..... 377678-S 0.75

377949/377977 GROMMET, Door Lock Pillar

78-79 2 reqd, pillar post..... 377949-S 1.00
78-79 27/32", pair, pillar..... 377977-S 1.00

BUMPERS, Fuel Filler Door

78-79 On body 378437-S 4.95
78-79 Hinge, on door, 2 reqd 379366-S 3.95
NEW! 80-96 On body 378359-S 2.99



16740 SEAL, Cowl Rear

66-77 56" long, 13 holes..... F-16740-6 12.50
78-79 Cowl lacing, hood to cowl, incl clips F-16740-4C 17.50

16758 BUMPER, Hood



66-77 Plug-in type on fender, 2 reqd F-16758-11 3.00



66-77 Stud type on fender, pair..... F-16763-1 9.95
68-70 Stud type, hood to cowl, each, 2 reqd 16763-1K 2.50
68-70 Hood to cowl, w/jam nut, adjustable, 1 1/8" diameter, pair, correct nut and yellow zinc plated shaft 16763-1AK 2.50
73-77 Stud type on fender, each, 2 reqd 16763-1K 2.50
73-77 On fender, stud type, w/jam nut, adjustable, 1 1/8" diameter, pair, correct nut and yellow zinc plated shaft..... 16763-1AK 2.50



78-79 Hood side, set of 4, repro..... F-16758-7A 7.95
80-91 On fender, 2 reqd F-16758-8 8.15
80 (b4 80 ser#HA0,001), bumper & retainer, 2 reqd, on rad support F-16758-10 2.25
80-91 (from 80 ser#HA0,001), nylon, 2 reqd, on rad. support F-16758-9 12.00
94-96 2 reqd, on rad. support F-16758-13 2.93

16993 BUMPER, Hood Latch Cam

69-77 Set 4..... F-16993-2 1.50



352963 SEAL, Temp. Cable to Firewall

66-68 ..... 352963-S 1.99

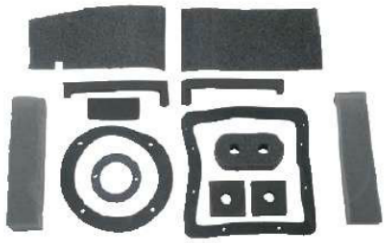

18565 SEAL KIT, Heater Gasket

66-77 13 pc set F-18565-2 12.95



18595 SEAL, Heater Hose to Firewall

66-77 2 reqd..... F-18595-1 2.00

01988 SEAL, Air Duct



66-77 Air inlet duct at head, pair, exact repro F-01988-1 44.95
66-77 Air inlet duct at head, pair, foam material, non-original..... F-01988-1A 13.95

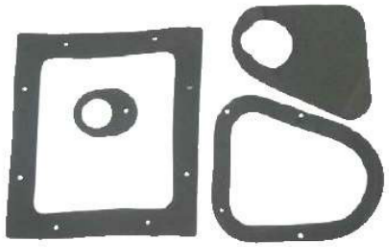

66-67 Interior air vent inlet duct, LH, 4 pc F-01934-2 14.85



02207 DRAIN TUBE, Air Duct Vent

66-77 Firewall air duct vent..... F-02207-1 16.50

BODY



22428/9 PAD, Outside Door Handle

66-77 Set of 4 ..... 22428-9-1A 3.95
78-79 Does two handles, original Ford tooling. F-22428-10A 10.00
80-96 Large, RH..... F-22428-5 4.05
80-96 Large, LH F-22429-5 4.05
80-96 Small, 2 reqd..... F-22448-5 1.56



22428 PAINT RESEAL KIT

Seals for body accessories like marker lamps, door handles, tail/lift gate handles and more in one kit!

66-77 Complete kit shown..... F-22428-8A 17.55

17997 PAD, Bumper Guard

78-86 Seals bumber guard to bumper to prevent scratches, 4 pc set F-17997-3A 7.95

WINDSHIELD



03110 WEATHERSTRIP, Front Windshield

66-77	W/o molding	F-03110-13	40.75
67-77	W/molding	F-03110-14	52.50
78-79	W/o trim molding, repro	F-03110-10	40.50
78-79	W/plastic chrome trim molding	F-03110-12	45.95

03114 WEATHERSTRIP, Windshield Frame

66-77	56" long. For trucks with vacuum wiper motors-drill holes into seal as needed	F-03114-1	29.95

03111 LOCK BEAD, Weatherstrip

78-79	W/molding, chrome	F-03111-1	19.95
78-79	W/molding, black, corners not included	F-03111-1A	14.95



03828 SEAL, Windshield Hinge

66-77	60" long	F-03828-1	7.50

DOOR



20518/9 WEATHERSTRIP, Door Top

78-79	Upper, 65" long, 2 reqd, orig.	F-20518-1	80.00
78-79	Upper, 65" long, pair, repro	F-20518-1A	15.75
80-96	Pair	F-20518-3	39.95

20586 RETAINER, Door Weatherstrip

66-79	Pair	20586-1AK	1.95
80-96	2-4 reqd	F-20586-2	53.83



20708/20530 WEATHERSTRIP, Door

66-77	Repro, pair, imported	F-20708-2A	72.95
66-77	Repro, pair, USA made	F-20708-2B	99.95
78-79	Original, each, 2 reqd	F-20530-7	125.00
78-79	Repro, pair	F-20530-7A	36.95
80-96	Front door, pair, repro	F-20708-1B	38.50



21408 RETAINER, Door Vent Weatherstrip

87-91	RH, w/o mirror holes, incl division bar and w/strip	F-21408-4	125.70
87-91	LH, w/o mirror holes, incl division bar and w/strip	F-21409-4	122.20
92-96	RH	F-21408-5	226.05
92-96	LH	F-21409-5	225.97

1966-77

A 20708 Weatherstrip, door
B 21410 Glass, door window
C 21412 Glass, vent window
D 21448 Weatherstrip, vent window
E 21450 Weatherstrip, vent division bar
F 21452 Weatherstrip, door belt, outside
G 21456 Weatherstrip, door belt, inside
H 21455 Weatherstrip set, door belt
J 21460 "Anti-rattle" kit, door window components are those with red letters
K 21508 Run, door glass lower, lock side
L 21596 Channel, door glass run upper
M 21608 Frame, vent window
N 22204 Frame, vent window outer
O 22916 Handle, vent window
P 223A48 Division bar, door window, upper, hinge side
Q 233A54 Division bar, door window, lower, hinge side
R 51222 Weatherstrip, roof side rail
S 21458 Channel, door glass retainer
T 20586 Retainer, door weatherstrip

Items in blue -check listings for applications

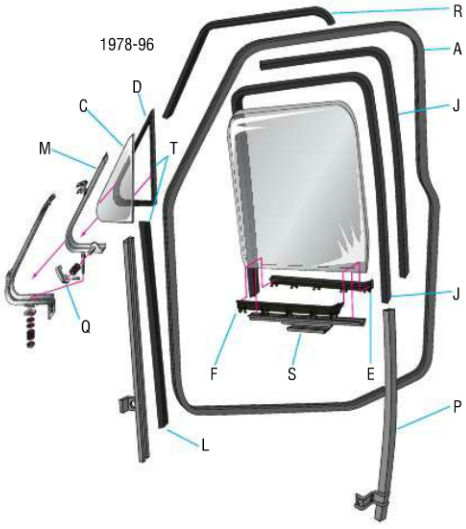

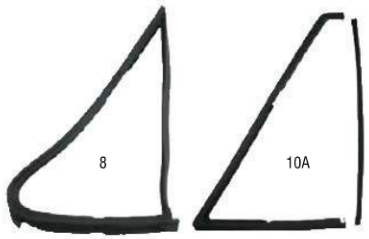

21448/9 WEATHERSTRIP, Vent Window

66-77	Pair, repro, incl 21450's	F-21448-10A	99.95	
78-79	Pair, repro	F-21448-7A	89.95	
80-86	RH	F-21448-8	36.50	
80-86	LH	F-21449-8	36.55	
80-86	Pair, repro	F-21448-8A	89.95	
87-91	RH	F-21448-9	80.35	
87-91	LH	F-21449-9	80.35	
NEW! 87-91	Pair, repro	F-21448-9A	48.95	

21450 WEATHERSTRIP, Vent Division Bar

66-77	Repro, pair	F-21450-6A	14.95

1966-77

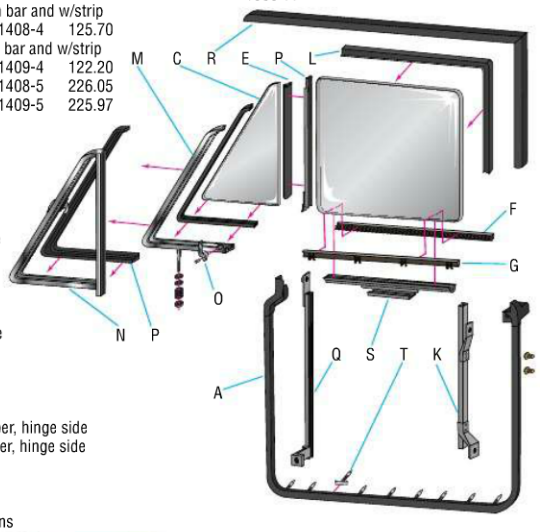

1978-96

A 20708 Weatherstrip, body
B 21410 Glass, door window
C 21412 Glass, vent window
D 21448 Weatherstrip, vent window
E 21452 Weatherstrip, door belt, outside
F 21456 Weatherstrip, door belt, inside
G 21455 Weatherstrip set, door belt
H 21460 "Anti-rattle" kit, door window components are those with red letters
J 21536 Run, door glass upper
L 21546 Run, door glass division bar
M 21608 Frame, vent window
P 222A00 Channel run, door glass rear
Q 22916 Handle, vent window
R 20518 Weatherstrip, door top
S 21458 Channel, door glass retainer
T 21408 Weatherstrip, vent window

Items in blue -check listings for applications



21455 WEATHERSTRIP KIT, Door Beltline Reproduction

66-77	4 pc set, repro	F-21455-8A	41.25
66-77	Outer, pair, repro	F-21455-11B	29.95
78-79	2 pc kit does outer only	F-21455-7B	38.95
78-79	Set 4, inner/outer both doors	F-21455-7A	39.50
78-79	OE style, set 4, inner/outer both doors	F-21455-7C	46.95
80-86	Set 4, inner/outer both doors	F-21455-9A	64.50
80-86	Outers only, 2 pc kit	F-21455-9B	38.95
80-86	OE style, set 4, inner/outer both doors	F-21455-9C	46.95

21452/3/6/7 WEATHERSTRIP, Door Beltline, Individual

Parts are original unless noted otherwise.

78-79	Outer, RH	F-21452-4	90.00
78-79	Outer, LH	F-21453-4	60.00
80-86	Outer, RH	F-21452-5	48.45
80-86	Outer, LH	F-21453-5	46.13
80-86	Inner, RH	F-21456-5	43.63
80-86	Inner, LH	F-21457-5	43.60
87-96	Outer, RH	F-21452-6	25.97
87-96	Outer, RH, repro	F-21452-6A	16.95
87-96	Outer, LH	F-21453-6	29.47
87-96	Outer, LH, repro	F-21453-6A	16.95
87-96	Inner, RH	F-21456-7	19.62
87-96	Inner, RH, repro	F-21456-7A	14.50
87-96	Inner, LH	F-21457-7	19.28
87-96	Inner, LH, repro	F-21457-7A	14.50

21460 ANTI-RATTLER KIT, Window

66-77	Complete set, 2 each: 21508 incl brackets, 21452, 21453, 21596, 233A54, 223A48, 12 pc kit	F-21460-7	199.95
78-79	Stainless, incl 21508, 21452, 21453, 21546, belt line w/strip has SS bead, for both doors	F-21460-8	69.95
80-86	Stainless, incl 21508, 21452, 21453, 21546, belt line w/strip has SS bead, for both doors	F-21460-10	79.95

21508 RUN, Door Glass Lower

66-77	Lock side, less brackets, repro, each	F-21508-7A	34.95

See also 21536 and 21546 door glass runs.





21536 RUN, Door Glass Upper

78-79	2 reqd	F-21536-1	38.47
78-79	Repro, per door. Includes 21546 bar run	F-21536-1B	20.75
80-96	Each, 2 reqd, repro	F-21536-2A	15.50

21546 RUN, Door Glass Division Bar

78-79	Original, 2 reqd	F-21546-2	90.00
78-79	Repro, correct style, each	F-21546-2A	5.25

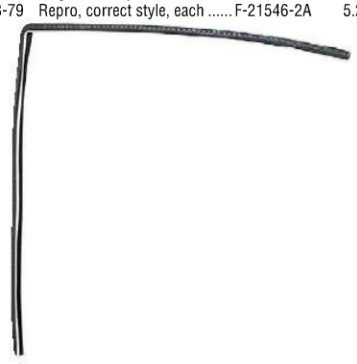

21596 CHANNEL, Door Glass Run Upper

66-77	Repro, pair, less bracket	F-21596-1A	48.95

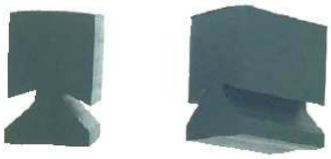

21762 BUMPER, Door Glass

66-77	Lower, pair	F-21762-1	2.95



222A00 CHANNEL RUN, Door, Rear

80-96	RH, front door	F-222A00-2	58.53
80-96	LH, front door	F-222A01-2	53.95

F-224A48-1A



F-224A54-1A

223A48/54 DIVISION BAR, Door Window

Provides channel that front of door window rides in. Upper is attached to rear of vent window frame. Lower is inside door.

66-77	Upper, hinge side, repro	F-223A48-1A	29.95
66-77	Lower, hinge side, repro	F-223A54-1A	29.95



439A00 BUMPER, Door

80-85	Front doors, 4 reqd	F-439A00-1	2.00

QUARTER WINDOW



278C94 WEATHERSTRIP, Quarter Panel

66-77	Repro, pair, on top of 1/4 to roof	F-278C94-1A	29.95



29904/5 WEATHERSTRIP, Quarter Window

78-79	W/o moldings, sliding glass, for 5/32" thick glass	F-29904-9	99.95



305A26/7 WEATHERSTRIP, Body Side Window

66-72	(b4 72 ser#W80,001), RH, w/o moldings	F-305A26-1	49.95
66-72	(b4 72 ser#W80,001), LH, w/o moldings	F-305A27-1	49.95
67-77	RH, w/window moldings	F-305A26-2	49.95
67-77	LH, w/window moldings	F-305A27-2	49.95

TAILGATE/LIFTGATE/REAR WINDOW



388016-S

388016 GROMMET, Tailgate Release Handle Rod

78-79		388016-S	2.00

F-16993-1 F-16993-3



16993 BUMPER, Tailgate Upper

66-68	Pair, on body	F-16993-1	2.25
69-77	Upper and lowers, each, 4 reqd, on body	F-16993-3	5.95



22428 PAD, Liftgate Handle

67-77	(from 67 ser#A42,001)	F-22428-7A	1.00

40224 BUMPER, Tailgate, Upper

NEW! 72-77 2-4 reqd, on pillar, same as F-439A00-1 original F-40224-1 2.50
NEW! 80-85 Doors, 4 reqd, on pillar, same as F-439A00-1 original F-40224-1 2.50



404A06 WEATHERSTRIP, Liftgate

66-68 Upper & side F-404A06-1 29.95



F-40452-1 F-40452-2

40452 WEATHERSTRIP, Liftgate Drain

66-68 Set of 4 ..... F-40452-1 9.95
69-77 Liftgate to side panel drain, pair F-40452-2 5.95



380478-S F-40481-1

380478 BUMPER, Liftgate

66-77 To prop rod, 2 reqd 380478-S 7.95

40481 BUMPER, Liftgate Latch

69-77 On tailgate, each F-40481-1 1.00

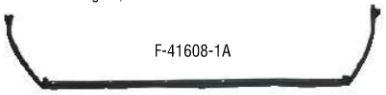

F-41608-1A

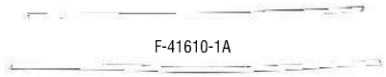

F-41610-1A

41608 WEATHERSTRIP, Tailgate

78-96 Original Ford tooling F-41608-1 149.95
78-96 Repro F-41608-1A 89.95

41610 WEATHERSTRIP, Tailgate Outside Window Belt Line

78-96 Original F-41610-1 54.12
78-96 Repro F-41610-1A 82.95

41616/7 SEAL, Tailgate Upper Corner

78-96 RH F-41616-1 30.22
78-96 LH F-41617-1 30.22



F-41626-1A

41626 WEATHERSTRIP, Tailgate Side

66-68 Pair, repro F-43730-1A 3.95
69-77 One piece, cut as reqd, fits on body to seal lift gate top and sides plus tailgate sides F-41626-1A 24.95

43730 WEATHERSTRIP, Tailgate Lower

66-77 Cut to 56 21/32" on 68-77's, original F-43730-1 9.95

42072 WEATHERSTRIP, Tailgate Inside Window Belt Line

78-96 ..... F-42072-1 53.52



42084 WEATHERSTRIP, Rear Window

66-77 Pick-up, use w/o moldings, body 97 ..... F-42084-19 49.95
67-72 Pick-up, use w/moldings, body 97 ..... F-42084-16 49.95
66-77 Wagon, use w/o moldings, body 98 ..... F-42084-15 49.95
67-77 Wagon, use w/moldings, body 98 ..... F-42084-17 49.95

422A20/36 RUN, Rear Window

78-96 Lower, inner side, orig., 2 reqd F-422A20-3 59.38
78-96 Lower, inner side, repro, pair . F-422A20-3A 12.50
78-96 Lower, inner side, repro, pair, rubber insert only F-422A20-3B 19.95
78-79 Upper F-422A36-3 39.95



42289/B32 WEATHERSTRIP, Liftgate Lower

On bottom edge of liftgate.

66-68 Repro F-42289-1A 29.95
69-77 Repro F-422B32-1A 39.95



431C63 BUMPER, Release Handle Stop

78-96 Tailgate F-431C63-1 1.00



43178 PAD, Tailgate Release Handle Mounting Plate

66-77 To body F-43178-1 3.25



43896 WEATHERSTRIP, Tailgate Drain

69-77 On tailgate, pair F-43896-1A 44.95



439A00 BUMPER, Tailgate & Doors

72-77 2-4 reqd, tail gate F-439A00-1 2.00
80-85 Front doors, 4 reqd F-439A00-1 2.00



43964 WEATHERSTRIP, Body Drain

66-68 On tailgate side, pair F-43964-1A 49.95



44482 BUMPER, Tailgate Support Retaining

66-77 2 reqd F-44482-1 4.50



51222/3 WEATHERSTRIP, Roof Side Rail

66-77 LH, original F-51223-1 39.95
66-77 Repro, pair F-51222-1A 41.50

51322 WEATHERSTRIP, Roof Front

78-96 Original F-51322-1 135.00
78-96 Repro F-51322-1A 29.95

513C22/3 WEATHERSTRIP, Roof Rear Side Belt

78-79 Pair, original Ford tooling F-513C22-2A 149.95
NEW! 80-96 RH, repro F-513C22-1A 39.95
NEW! 80-96 LH, repro F-513C23-1A 39.95

54732 WEATHERSTRIP, Front Roof Rear

Where front of removeable roof meets the rear of the cab. Mounts to cab body.

78-88 (b4 5/88) F-54732-3 27.50
88-96 (from 5/88) F-54732-1 56.73

FUEL FILLER DOOR

BUMPER, Fuel Filler Door

78-79 On body, pair 378437-S 4.95
78-79 On door at hinge, 1 reqd 379366-S 3.95
80-96 On door at hinge, 1 reqd 354860-S 2.00
80-96 On body to door, 2 reqd 378359-S 2.99

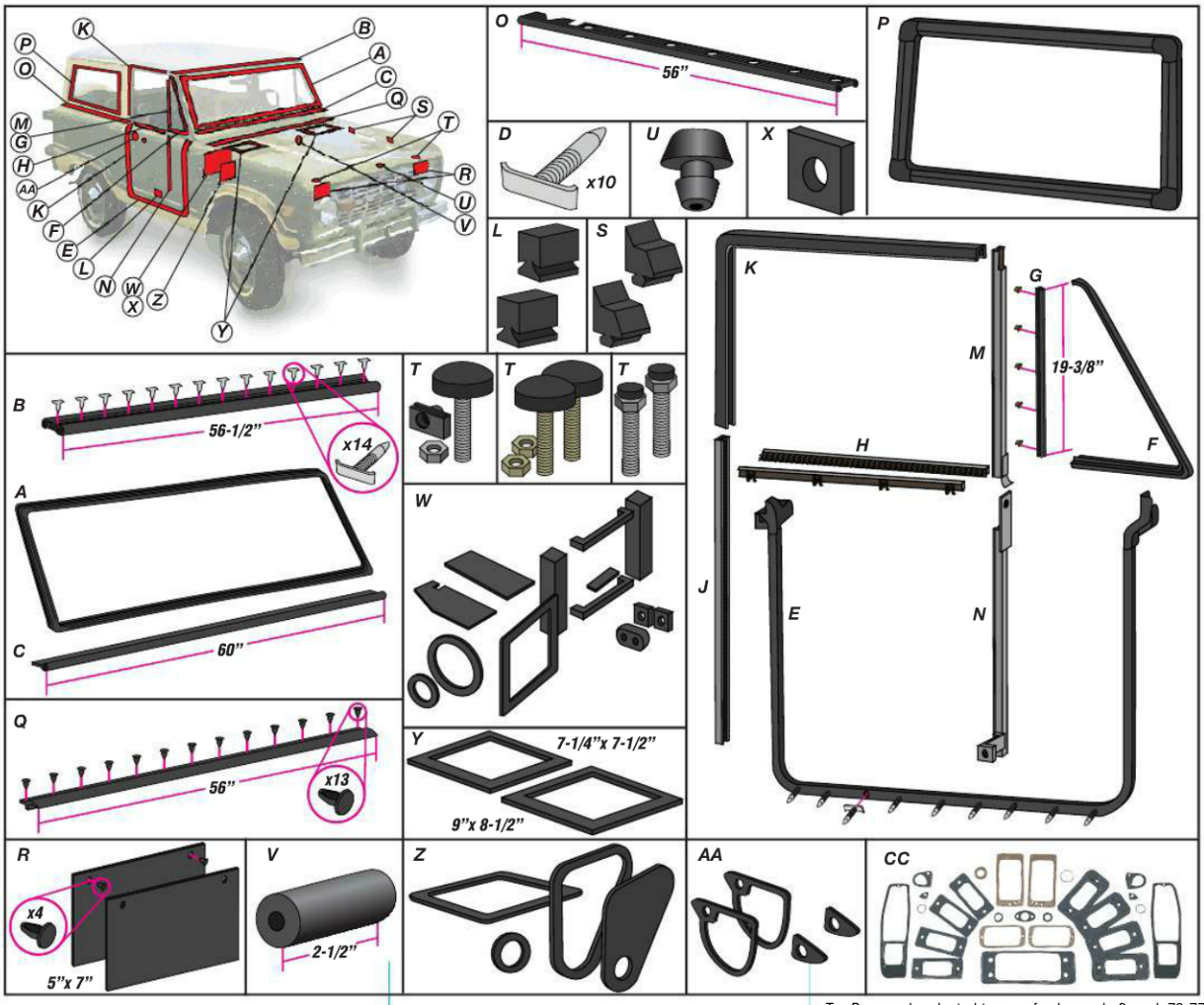

66–77 Seals, Weatherstripping, Rubber

- A Weatherstrip, ft windshield, w/o molding, 66-77 ..... F-03110-13 40.75
- A Weatherstrip ft windshield, w/molding, 67-77 ..... F-03110-14 52.50
- B Weatherstrip, windshield frame, 56" long. For trucks with vacuum wiper motors-drill holes into seal as needed F-03114-1 29.95
- C Seal, windshield hinge, 60" long ... F-03828-1 7.50
- D Retainer, door weatherstrip, pair ... 20586-1AK 1.95
- E Weatherstrip, door, repro, pair, USA made F-20708-2B 99.95
- E Weatherstrip, door, repro, pair, imported F-20708-2A 72.95
- F Weatherstrip, vent window, pair, repro, inc's 21450's F-21448-10A 99.95
- G Weatherstrip, vent window division bar, repro, pair F-21450-6A 14.95
- H Weatherstrip set, door beltline, 4 pc set, repro F-21455-8A 41.25
- H Weatherstrip set, door beltline, outer, pair, repro F-21455-11B 29.95
- I Anti-rattler kit, door beltline, complete set F-21460-7 199.95
- J Run, door glass, w/o bracket, ea .. F-21508-7A 34.95
- K Channel, door glass run upper, repro, pair F-21596-1A 48.95
- L Bumper, door glass lower, pair F-21762-1 2.95
- M Division bar, door window, upper, hinge side, repro F-223A48-1A 29.95
- N Division bar, door window, lower, hinge side, repro F-223A54-1A 29.95
- O Weatherstrip, quarter panel, repro, pair, on top of 1/4 to roof F-278C94-1A 29.95
- P Weatherstrip, body side window, 66-72 (b4 72 ser#W80,001), RH, w/o moldings F-305A26-1 49.95
- P Weatherstrip, body side window, 66-72 (b4 72 ser#W80,001), LH, w/o moldings F-305A27-1 49.95
- P Weatherstrip, body side window, 67-77, RH, w/window moldings F-305A26-2 49.95
- P Weatherstrip, body side window, 67-77, LH, w/window moldings F-305A27-2 49.95
- Q Seal, cowl, at hood, 56" long, 13 holes F-16740-6 12.50
- R Splash shields, head light bucket, pair F-13B159-1 5.95
- S Bumper, hood, plug-in type on fender, 2 reqd F-16758-11 3.00
- T Bumper, hood, stud type on fender, pair, 66-77 ..... F-16763-1 9.95
- T Bumper, hood, stud type, hood to cowl, each, 2 reqd, 68-70 ..... 16763-1K 2.50
- T Bumper, hood, hood to cowl, w/jam nut, adjustable, 1 1/8" diameter, pair, correct nut and yellow zinc plated shaft, 68-70 ..... 16763-1AK 2.50
- T Bumper, hood, stud type on fender, each, 2 reqd, 73-77 ..... 16763-1K 2.50
- T Bumper, hood, on fender, stud type, w/jam nut, adjustable, 1 1/8" diameter, pair, correct nut and yellow zinc plated shaft, 73-77 ..... 16763-1AK 2.50
- U Bumper, hood latch cam, 69-77, set 4 ..... F-16993-2 1.50
- V Seal, temperature cable, to firewall, 66-68 ..... 352963-S 1.99
- W Seal kit, heater gasket, 13 pc set .. F-18565-2 12.95
- X Seal, heater hose, to firewall, 2 reqd F-18595-1 2.00
- Y Seal, air inlet duct at head, pair, exact repro F-01988-1 44.95
- Y Seal, air inlet duct at head, pair, foam material, non-original F-01988-1A 13.95
- Z Seal set, interior air vent inlet duct, LH, 66-67, 4 pc F-01934-2 14.85
- AA Pad set, outside door handle, set of 4 ..... 22428-9-1A 3.95
- CC Paint reseal kit, seals for body accessories like marker lamps, door handles, tail/lift gate handles and more in one kit! F-22428-8A 17.55
- DD Drain tube, air vent duct, at firewall vent F-02207-1 16.50
- EE Weatherstrip, roof side rail, LH, original F-51223-1 39.95
- EE Weatherstrip, roof side rail, repro, pair F-51222-1A 41.50

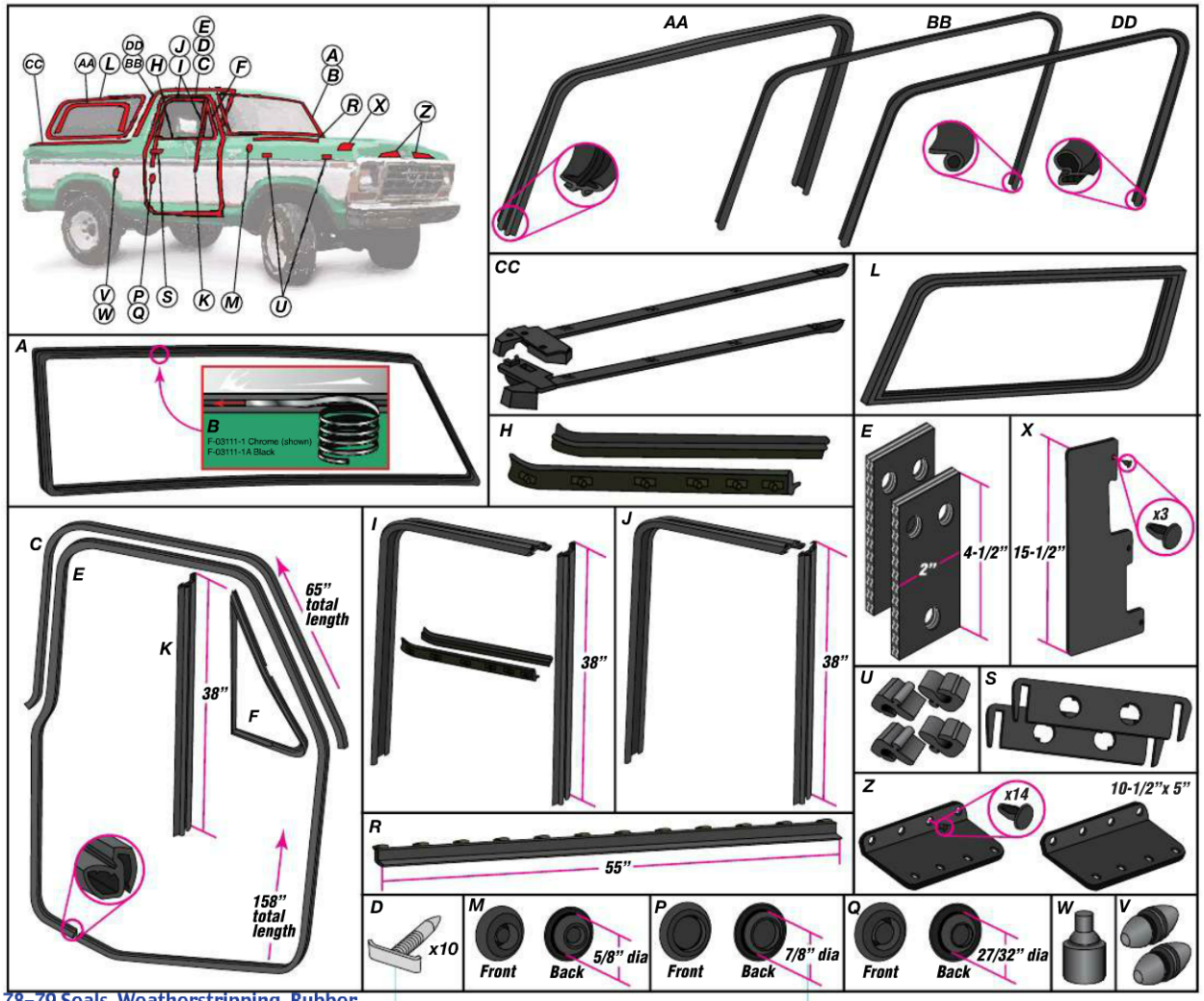

78–79 Seals, Weatherstripping, Rubber

A Weatherstrip, ft windshield, w/o trim molding, repro F-03110-10 40.50

A Weatherstrip, ft windshield, w/plastic chrome trim molding F-03110-12 45.95

B Weatherstrip, windshield lockbead, w/molding, chrome F-03111-1 19.95

B Weatherstrip, windshield lockbead, w/molding, black, corners not included..... F-03111-1A 14.95

C Weatherstrip, door top, upper, 65" long, 2 req'd, orig F-20518-1 80.00

C Weatherstrip, door top, upper, 65" long, pair, repro F-20518-1A 15.75

D Retainer, door weatherstrip, pair... 20586-1AK 1.95

E Weatherstrip, door, original, each, 2 req'd F-20530-7 125.00

E Weatherstrip, door, repro, pair..... F-20530-7A 36.95

F Weatherstrip, vent window, pair, repro F-21448-7A 89.95

H Weatherstrip set, door beltline, 2 pc kit does outer only F-21455-7B 38.95

H Weatherstrip set, door beltline, set 4, inner/outer both doors..... F-21455-7A 39.50

H Weatherstrip set, door beltline, OE style, set 4, inner/outer both doors..... F-21455-7C 46.95

H Weatherstrip, door beltline, outer, RH, original F-21452-4 90.00

H Weatherstrip, door beltline, outer, LH, original F-21453-4 60.00

I Anti-rattler kit, door beltline, stainless, incl 21508, 21452, 21453, 21546, belt line w/strip has SS bead, for both doors F-21460-8 69.95

J Run, door glass upper, 2 reqd, original F-21536-1 38.47

J Run, door glass upper, repro, 2 reqd. Includes 21546 bar run..... F-21536-1B 20.75

K Run, door glass division bar, original, 2 reqd F-21546-2 90.00

K Run, door glass division bar, repro, correct style, each F-21546-2A 5.25

L Weatherstrip, quarter window, w/o moldings, sliding glass, for 5/32" thick glass..... F-29904-9 99.95

M Grommet, 5/8", rear upper fender below 16740, pair 376996-S 4.95

N Grommet, 5/8", on firewall, pair ... 376996-S 4.95

O Grommet, front fender rear, 5/8" O.D., on top just below 16740 seal, pair..... 376996-S 4.95

P Grommet, 2 reqd, door pillar post 377949-S 1.00

Q Grommet, 27/32", pair, door pillar post 377977-S 1.00

R Seal, cowl, at hood, correct style.. F-16740-4 CALL

R Seal, cowl lacing, hood to cowl, incl clips F-16740-4C 17.50

S Pad, door handle, pair, original Ford tooling. F-22428-10A 10.00

T Seal, bumper guard to bumper, set of 4 ..... F-17997-3A 7.95

U Bumper, hood side, set of 4, repro F-16758-7A 7.95

V Bumper, fuel door, on body, pair... 378437-S 4.95

W Bumper, fuel door hinge, on door, pair 379366-S 3.95

X Splash shield, alternator, to apron F-10317-1 17.50

Z Heat shield, radiator support to grille, pair F-8C122-1 9.95

AA Weatherstrip, top rear window, upper and side F-422A36-3 39.95

BB Weatherstrip, roof front, original .. F-51322-1 135.00

BB Weatherstrip, roof front, repro..... F-51322-1A 29.95

CC Weatherstrip, roof rear side belt, pair, original Ford tooling F-513C22-2A 149.95

DD Weatherstrip, front roof, rear, where front of removeable roof meets the rear of the cab. Mounts to cab body. F-54732-3 27.50

EE Seal, fender apron to cab mount, pr F-16A054-1 12.00

- Grommet, on fender front, top below lip at apron, 2 reqd, 1 ½" hole..... 377678-S 0.75

- Grommet, on fender rear at lip to apron, 2 reqd, 5/8" hole 376966-S 0.75

- Bumper, fuel door hinge, on door, 2 reqd 379366-S 3.95

- Seals, bumper guard to bumper to prevent scratches, 4 pc set..... F-17997-3A 7.95

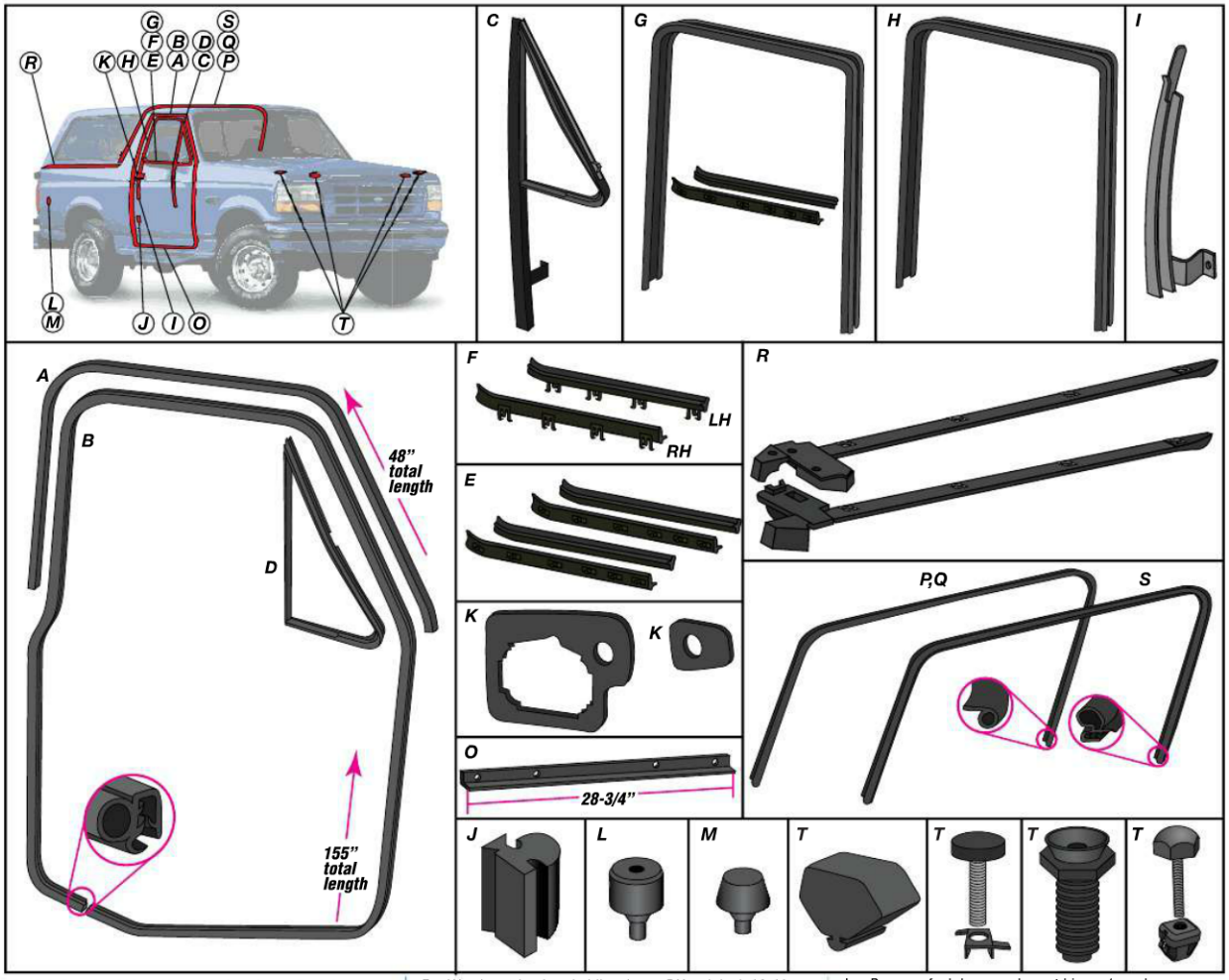

80–96 Seals, Weatherstripping, Rubber

A	Weatherstrip, door top, pair	F-20518-3	39.95
B	Weatherstrip, door, pair, repro	F-20708-1B	38.50
C	Retainer, vent window, RH, w/o mirror holes, incl division bar and w/strip, 87-91	F-21408-4	125.70
C	Retainer, vent window, LH, w/o mirror holes, incl division bar and w/strip, 87-91	F-21409-4	122.20
C	Retainer, vent window, RH, 92-96	F-21408-5	226.05
C	Retainer, vent window, LH, 92-96	F-21409-5	225.97
D	Weatherstrip, vent window, original, RH, 80-86	F-21448-8	36.50
D	Weatherstrip, vent window, original, LH, 80-86	F-21449-8	36.55
D	Weatherstrip, vent window, pair, repro, 80-86	F-21448-8A	89.95
D	Weatherstrip, vent window, original, RH, 87-91	F-21448-9	80.35
D	Weatherstrip, vent window, original, LH, 87-91	F-21449-9	80.35
D	Weatherstrip, vent window, pair, repro, 87-91	F-21448-9A	48.95
E	Weatherstrip set, door beltline, set 4, inner/outer both doors	F-21455-9A	64.50
E	Weatherstrip set, door beltline, outers only, 2 pc kit	F-21455-9B	38.95
E	Weatherstrip set, door beltline, OE style, set 4, inner/outer both doors	F-21455-9C	46.95
F	Weatherstrip, door beltline, outer, RH, original, 80-86	F-21452-5	48.45
F	Weatherstrip, door beltline, outer, LH, original, 80-86	F-21453-5	46.13
F	Weatherstrip, door beltline, inner, RH, original, 80-86	F-21456-5	43.63
F	Weatherstrip, door beltline, inner, LH, original, 80-86	F-21457-5	43.60
F	Weatherstrip, door beltline, outer, RH, original, 87-96	F-21452-6	25.97
F	Weatherstrip, door beltline, outer, RH, repro, 87-96	F-21452-6A	16.95
F	Weatherstrip, door beltline, outer, LH, original, 87-96	F-21453-6	29.47
F	Weatherstrip, door beltline, outer, LH, repro, 87-96	F-21453-6A	16.95
F	Weatherstrip, door beltline, inner, RH, original, 87-96	F-21456-7	19.62
F	Weatherstrip, door beltline, inner, RH, repro, 87-96	F-21456-7A	14.50
F	Weatherstrip, door beltline, inner, LH, original, 87-96	F-21457-7	19.28
F	Weatherstrip, door beltline, inner, LH, repro, 87-96	F-21457-7A	14.50
G	Anti-rattler kit, door beltline, stainless, incl 21508, 21452, 21453, 21546, belt line w/strip has SS bead, for both doors, 80-86	F-21460-10	79.95
H	Run, door glass upper, 80-96, each, 2 reqd, repro	F-21536-2A	15.50
I	Channel run, door, rear, RH	F-222A00-2	58.53
I	Channel run, door, rear, LH	F-222A01-2	53.95
J	Bumper, door, 80-85, 4 reqd	F-439A00-1	2.00
K	Pad, door handle, large, RH	F-22428-5	4.05
K	Pad, door handle, large, LH	F-22429-5	4.05
K	Pad, door handle, small, 2 reqd	F-22448-5	1.56
L	Bumper, fuel door, on door at hinge, 1 reqd	354860-S	2.00
M	Bumper, fuel door, on body to door, 2 reqd	378359-S	2.99
N	Seal, bumper guard to bumper, set of 4	F-17997-3A	7.95
O	Retainer, door weatherstrip, 2-4 reqd	F-20586-2	53.83
P	Weatherstrip, roof front, original	F-51322-1	135.00
Q	Weatherstrip, roof front, repro	F-51322-1A	29.95
S	Weatherstrip, front roof, rear, where front of removeable roof meets the rear of the cab. Mounts to cab body. (b4 5/88)	F-54732-3	27.50
	(from 5/88)	F-54732-1	56.73
T	Bumper, hood, 80-91, on fender, 2 reqd	F-16758-8	8.15
T	Bumper, hood, 80 (b4 80 ser#HA0,001), bumper & retainer, 2 reqd, on rad support	F-16758-10	2.25
T	Bumper, hood, 80-91 (from 80 ser#HA0,001), nylon, 2 reqd, on rad. support	F-16758-9	12.00
T	Bumper, hood, 94-96, 2 reqd, on rad. support	F-16758-13	2.93
-	Seals bumper guard to bumper to prevent scratches, 4 pc set, 80-86	F-17997-3A	7.95
-	Bumper, upper, doors, 4 reqd, on pillar, original, 80-85	F-40224-1	2.50
-	Weatherstrip, roof rear side, RH, repro	F-513C22-1A	39.95
-	Weatherstrip, roof rear side, LH, repro	F-513C23-1A	39.95

66–68 Tailgate/liftgate/rear window

A Bumper, tailgate, lower, pair, on body F-16993-1 2.25
C Pad, liftgate handle, 67-68 (from 67 ser#A42,001) F-22428-7A 1.00
D Weatherstrip, liftgate, upper & side F-404A06-1 29.95
E Weatherstrip, liftgate side drain, set of 4 ..... F-40452-1 9.95
F Bumper, liftgate to prop rod, 2 reqd 380478-S 7.95
G Weatherstrip, tailgate side, pair, repro F-43730-1A 3.95
H Weatherstrip, tailgate lower, cut to 56 21/32" on 68's, original F-43730-1 9.95
I Weatherstrip, rear window, pick-up, use w/o moldings F-42084-19 49.95
I Weatherstrip, rear window, pick-up, use w/moldings F-42084-16 49.95
I Weatherstrip, rear window, wagon, use w/o moldings F-42084-15 49.95
I Weatherstrip, rear window, wagon, use w/moldings F-42084-17 49.95
J Weatherstrip, liftgate lower, repro, on bottom edge of liftgate F-42289-1A 29.95
K Pad, tailgate release handle mounting plate, to body F-43178-1 3.25
L Weatherstrip, body drain, on tailgate side, pair F-43964-1A 49.95
M Bumper, tailgate support retainer, 2 reqd F-44482-1 4.50

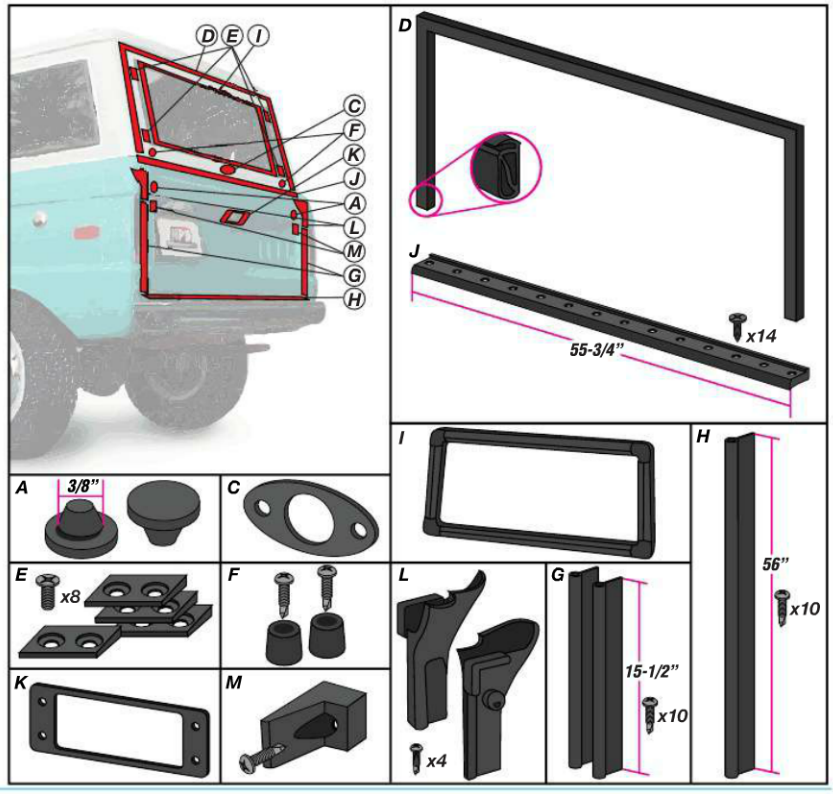

69–77 Tailgate/liftgate/rear window

A Bumper, tailgate, upper and lowers, on body, each, 4 reqd F-16993-3 5.95
B Pad, liftgate handle F-22428-7A 1.00
C Weatherstrip, liftgate to side panel drain , pair F-40452-2 5.95
D Bumper, liftgate to prop rod, 2 reqd 380478-S 7.95
E Bumper, liftgate latch, on tailgate, each F-40481-1 1.00
F Weatherstrip, tailgate, one piece, cut as reqd, fits on body to seal liftgate top and sides plus tailgate sides F-41626-1A 24.95
H Weatherstrip, tailgate lower, cut to 56 21/32", original F-43730-1 9.95
I Weatherstrip, rear window, pick-up, use w/o moldings F-42084-19 49.95
I Weatherstrip, rear window, pick-up, use w/moldings F-42084-16 49.95
I Weatherstrip, rear window, wagon, use w/o moldings F-42084-15 49.95
I Weatherstrip, rear window, wagon, use w/moldings F-42084-17 49.95
J Weatherstrip, liftgate lower, on bottom edge of lift gate, repro F-422B32-1A 39.95
K Pad, tailgate release handle mounting plate, to body F-43178-1 3.25
L Weatherstrip, tailgate drain, on tail gate, pair F-43896-1A 44.95
M Bumper, tailgate, 72-77, 2-4 reqd . F-439A00-1 2.00
N Bumper, tailgate support retainer, 2 reqd F-44482-1 4.50

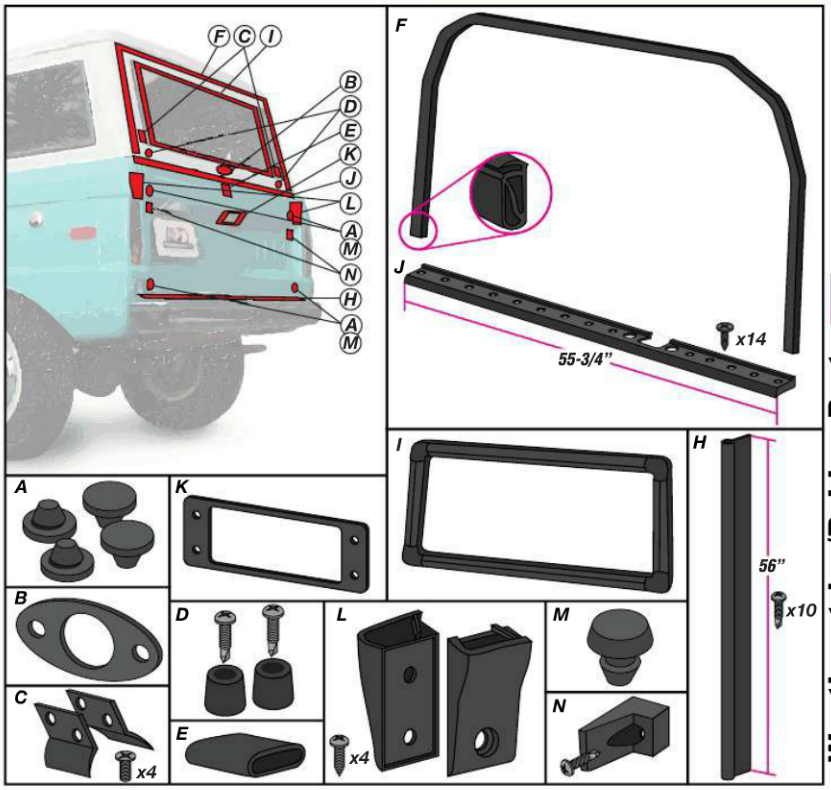

78–96 Tailgate

B	Grommet, tailgate release handle rod	388016-S	2.00
C	Weatherstrip, tailgate, bottom & sides, original Ford tooling	F-41608-1	149.95
C	Weatherstrip, tailgate, bottom & sides, repro	F-41608-1A	89.95
D	Weatherstrip, tailgate beltline, outside, original, each	F-41610-1	54.12
D	Weatherstrip, tailgate beltline, repro, pair (incl 41610 & 42072)	F-41610-1A	82.95
E	Weatherstrip, tailgate, beltline, inside, original, each	F-42072-1	53.52
F	Seal, tailgate upper corner, RH	F-41616-1	30.22
F	Seal, tailgate upper corner, LH	F-41617-1	30.22

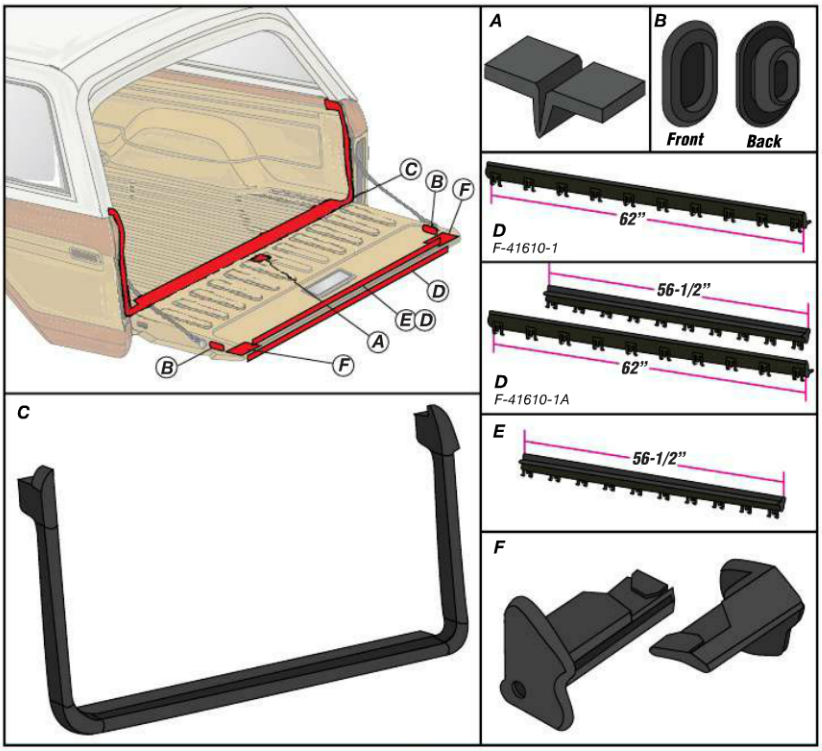

LOCKS/KEYS



11582 CYLINDER AND KEYS, Ignition

66-77		11582-1	7.95
78	(b4 78 ser#CA0,001)	F-11582-4	8.25
78-79	(from 78 ser#CA0,001)	F-11582-5	22.25
80		F-11582-6	25.50
81-84		F-11582-7	17.95
85-91		F-11582-8	14.95
92-95	W/o anti-theft	F-11582-9	42.50
95-96	Black, original	F-11582-10	44.95 NEW!
95-96	Black, repro	F-11582-10A	30.50 NEW!



16978 CYLINDER & KEYS, Hood Latch Release

78-79		F-16978-1	27.50

16978 LOCK CYLINDER, Tailgate

80-84		F-16978-1	27.50 NEW!
85-96	Bright finish	F-43505-1	24.95



06081 LOCK CYLINDER & KEY, Glove Box

78		43507-1	49.95
80-85		F-06081-4	36.95
82-91	Console	F-06081-4	36.95



21984/5 LOCK CYLINDER, Door

66-77	Single sided key, reuse old lever, pair, incl 22023-1 clips	21984-1	20.95	NEW!
78	Reverse lever for RH, each	21984-2	13.95	NEW!
79	Reverse lever for RH, pair	F-21984-3	15.95	NEW!
80-81	(b4 10/80), pair	F-21984-3	15.95	NEW!
81-85	(from 10/80), pair, original	F-21984-4	17.07	NEW!
81-85	(from 10/80), pair, repro	F-21984-4A	24.95	
86-91	Pair	F-21984-3	15.95	

Reverse lever by removing "C" clip, flip lever and re-install "C" clip.

Locks may need to reuse original lever.



22050 LOCK CYLINDER KIT, Doors/Ignition

Kits include 2 doors and 1 ignition lock with matched keys.

66-67		22050-1	22.95	
68-77	NOS originals, limited availability	F-22050-5	49.95	
68-77	Repro	F-22050-5A	44.95	NEW!
68-77	Re-use original levers on back of door lock, plain keys, replacements	22050-1	22.95	
78-79	Plain keys	22050-2	20.95	
80		F-22050-4	114.95	
80	Repro	F-22050-4A	50.95	NEW!
81-84	Original	F-22050-6	114.95	NEW!
81-84	Repro	F-22050-6A	50.95	NEW!
85-91	Original	F-22050-7	117.95	NEW!
85-91	Repro	F-22050-7A	52.95	NEW!
92-94	W/o anti-theft, bright	F-22050-9	117.63	
92-94	W/o anti-theft, black	F-22050-10	124.95	
95-96	(from 2/95 to b4 11/95), w/o anti-theft, bright	F-22050-13	99.95	

Locks may need to reuse original lever.



22053 KEY BLANK, Ignition

66-77 "FORD" vee T-022053-1A 1.50
78-96 Double sided, w/o anti-theft ... 22053-2 1.95

43562 KEY BLANK, Door, Liftgate, Glove Box

66-77 "FORD" vee T-043562-1A 1.50
78-94 Double sided, w/o anti-theft ... 43562-2 1.95

1966-77 BRONCO

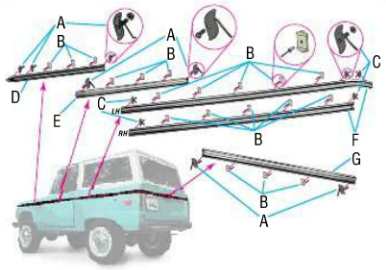

A 20880 Retainer, molding
B 29318 Retainer, molding
C 40248 Retainer, molding
D 16003 Molding, fender
E 20938 Molding, door
F 29038 Molding, quarter
G 41018 Molding, tailgate
Items in blue- check listing for applications

MOLDING, Grille

67-77 Set of 4, incl clips, original Ford tooling F-8169-1B 164.95
67-77 Retainer clip, upper & lower mldg, 4 reqd for each and uses 2 on either end F-8244-1 3.00
67-77 Retainer clip, 3 reqd for each upper & lower mldg (at centers), 4 reqd for each side mldg, original 291B80-1 12.68
67-77 Retainer clip, 3 reqd for each upper & lower mldg (at centers), 4 reqd for each side mldg, repro F-291B80-1 3.00

MOLDING, Fender

66-77 RH, incl clips, 1 1/4" original Ford tooling F-16003-23 84.95
66-77 LH, incl clips, 1 1/4" original Ford tooling F-16004-23 84.95

MOLDING, Front Door

66-77 Fits RH/LH, incl clips, 1 1/4", original Ford tooling, each F-20938-23 59.95

MOLDING, Quarter Panel

66-77 RH, w/o swing-away spare, incl clips, 1 1/4", original Ford tooling F-29038-23 84.95
66-77 RH, w/swing-away spare, incl clips, 1 1/4", original Ford tooling F-29076-23 59.95
66-77 LH, incl clips, 1 1/4", original Ford tooling F-29039-23 84.95
66-77 Retainer, quarter molding- 3 reqd per side in center F-40248-3 2.50

MOLDING, Tailgate, Upper

66-77 Incl clips, 1 1/4", original Ford tooling F-41018-23 59.95

1978-79 BRONCO

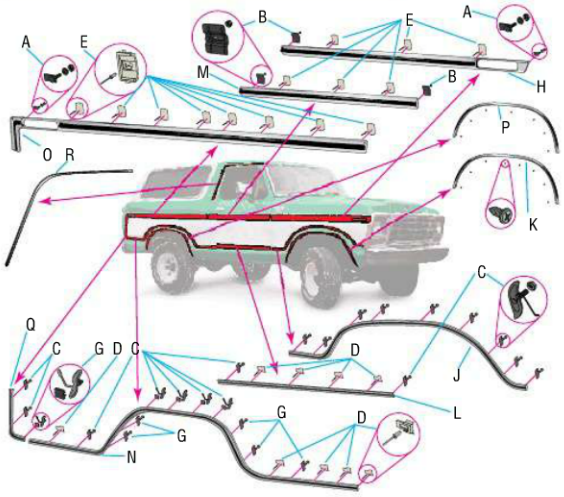

A 381955 Retainer
B 16A076 Retainer
C 16A076 Retainer
D 20818 Retainer
E 20880 Retainer
F 29316 Retainer
G 423B06 Retainer
H 16003 Molding, fender upper
J 16003 Molding, fender, lower
K 16038 Molding, ft wheel well
L 20878 Molding, door lower
M 20938 Molding, door upper
N 29038 Molding, quarter lower
O 29038 Molding, quarter upper
P 29164 Molding, rr wheel well
Q 29396 Molding, quarter rear
R 51726 Molding, drip rail
Items in blue- check listing for applications

LOCK BEAD, Weatherstrip

78-79 Bright, corners not included, cut to fit, 72" long F-03111-1 19.95
78-79 Black, corners not included, cut to fit, 72" long F-03111-1A 14.95

MOLDING, Windshield

Upper Corner
78-79 Bright, RH/LH, each F-030A42-1 7.50
Lower Corner
78-79 Bright, RH/LH, each F-03122-1 5.50
Lower belt
78-79 Bright, 72 3/4" long, cut to fit F-03111-1 19.95

MOLDING, Ft Fender Upper

78-79 RH, black vinyl insert, race track style F-16003-6 99.95
78-79 LH, black vinyl insert, race track style F-16004-7 99.95

MOLDING, Ft Fender Lower

78-79 RH, black vinyl insert, race track style F-16003-5 124.95
78-79 LH, black vinyl insert, race track style F-16004-6 124.95

MOLDING, Front Fender Wheel Opening

78-79 RH, original F-16038-2 39.95
78-79 RH, repro F-16038-2A 24.95
78-79 LH, original F-16039-2 39.95
78-79 LH, repro F-16039-2A 24.95

MOLDING, Ft Door Outside Lower

78-79 Black vinyl insert, race track style, RH/LH, each F-20878-2 99.95

MOLDING, Ft Door Outside Upper

78-79 RH, black vinyl insert, race track style F-20938-3 69.95
78-79 LH, black vinyl insert, race track style F-20939-3 69.95

MOLDING SET, Upper

78-79 Bright/black vinyl insert, 6 pcs, original Ford tooling, **OS** F-29038-17AA524.95

MOLDING, Quarter Panel

Race track style, black vinyl insert, original Ford tooling.
78-79 RH, **OS** F-29038-20 149.95
78-79 LH, **OS** F-29039-20 149.95
78-79 RH, upper, **OS** F-29038-18 124.95
78-79 LH, upper, **OS** F-29039-18 124.95

MOLDING, Box Wheel Opening

78-79 RH, original F-29164-2 39.95
78-79 RH, repro F-29164-2A 24.50
78-79 LH, original F-29165-2 39.95
78-79 LH, repro F-29165-2A 24.50

MOLDING, Quarter Panel Side Rear

78-79 RH, race track style F-29396-1 46.95
78-79 LH, race track style F-29397-1 46.95

MOLDING, Tailgate, Outside

78-79 Upper F-41018-2 59.95
78-79 Lower F-41018-3 59.95

MOLDING, Back Window

78-79 Bright, 143" long, cut to fit..... F-42430-1 60.00

COVER, Back Window Molding Joint

78-79 Bright F-42436-1 3.59

MOLDING, Roof Drip Rail

78-79 RH F-51726-1 34.95
78-79 LH F-51727-1 34.95

CLIPS & RETAINERS, Molding

78-79 ..... 381955-S 1.50
78-79 ..... F-16A076-3 2.00
78-79 ..... F-16A076-4 2.00
78-79 ..... F-20818-1 2.00
78-79 ..... F-20880-5 1.50
78-79 ..... F-29316-2 2.00
78-79 ..... F-423B06-1 2.00

1980-96 BRONCO

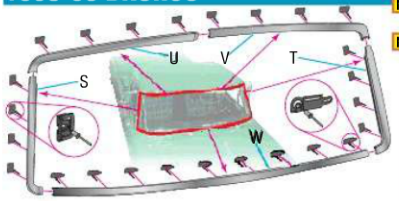

S 03136 Mldg, w/s side RH V 03145 Mldg, w/s top LH
T 03137 Mldg, w/s side LH W 03148 Mldg, w/s lower belt
U 03144 Mldg, w/s top RH
Items in blue- check listing for applications

MOLDING, Windshield

Side

80-96 RH, bright F-03136-3 52.50
80-96 LH, bright F-03137-3 52.42
92-96 LH, black, excl 94 Bronco F-03137-6 95.00

Upper

80-96 RH, bright F-03144-3 52.42
80-96 LH, bright F-03145-3 49.25

Lower belt

80-96 Bright F-03148-4 70.68
92-96 Black, excl 94 Bronco F-03148-6 95.00

42309 CLIP, Molding

NEW! 80-86 Front windshield lower molding 42309-1 2.00

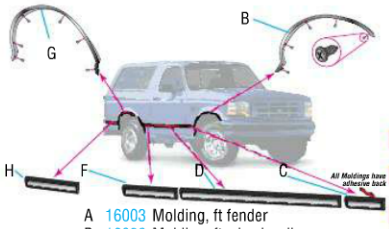

A 16003 Molding, ft fender
B 16038 Molding, ft wheel well
C 16A038 Molding, ft fender rear
D 20878 Molding, door
E 29038 Molding, quarter center
F 29076 Molding, quarter front
G 29164 Molding, rr wheel well
H 29314 Molding, quarter rear
Items in blue- check listing for applications

MOLDING, Front Fender

80-86 RH, bright, not shown F-16003-4 120.00
80-86 LH, bright, not shown F-16004-5 72.47
80-84 RH, upper, w/o vinyl insert, original Ford tooling
NEW! F-16003-7 74.95
80-84 LH, upper, w/o vinyl insert, original Ford tooling
NEW! F-16004-8 74.95
85 RH, black and bright insert, pressure sensitive
NEW! ..... F-16003-9 CALL
85 LH, black and bright insert, pressure sensitive
NEW! ..... F-16004-10 CALL

MOLDING, Ft Fender Wheel Opening

80-86 RH, w/o vinyl insert, original .. F-16038-3 88.18
80-86 RH, w/o vinyl insert, repro F-16038-3A 19.95
80-86 LH, w/o vinyl insert, original .. F-16039-3 70.13
80-86 LH, w/o vinyl insert, repro F-16039-3A 19.95
87-96 RH, bright, original F-16038-5 99.92
87-96 RH, bright, repro F-16038-5A 40.50
87-96 LH, bright, original F-16039-5 104.35
87-96 LH, bright, repro F-16039-5A 40.50

MOLDING, Front Fender Rear

92-96 RH, black w/bright insert..... F-16A038-21 44.25
92-96 LH, black w/bright insert..... F-16A039-21 49.77

20938/9 MOLDING, Front Door

NEW! 85 RH, black and bright insert, use w/ swing-lock mirror, pressure sensitive ..... F-20938-5 CALL
NEW! 85 LH, black and bright insert, use w/ swing-lock mirror, pressure sensitive F-20939-5 29.95

MOLDING, Front Door

92-96 RH, black w/bright insert..... F-20878-21 65.83

MOLDING, Quarter Panel Center Lower

80-86 RH, bright, not shown F-29038-9 99.95
80-86 LH, bright, not shown F-29039-9 99.95

MOLDING, Quarter Wheel Opening

80-86 RH, w/o vinyl insert, original .. F-29164-3 66.40
80-86 RH, w/o vinyl insert, repro F-29164-3A 19.95
80-86 LH, w/o vinyl insert, original .. F-29165-3 62.88
80-86 LH, w/o vinyl insert, repro F-29165-3A 19.95
87-96 RH, bright, original F-29164-5 123.48
87-96 RH, bright, repro F-29164-4A 22.95
87-96 LH, bright, original F-29165-5 123.48
87-96 LH, bright, repro F-29165-4A 22.95

MOLDING, Back Window

80-96 143" long, cut to fit F-42430-1 60.00



PANEL, Tailgate Finish

87-91 Brushed aluminum, **OS** F-425A34-7 224.95

RETAINER, Molding

NEW! 80-84 Upper black w/ bright insert molding, 12 per quarter side, 7 per tail gate molding ... F-21066-2 1.50
NEW! 80-86 2 5/8" Lower molding black with thin vinyl, door 6 reqd per side, plastic F-21066-3 2.00
NEW! 80-86 Clip, Lower side molding, black with thin vinyl, 2 each side Reg cab corner, 2 each side quarter front, 2 each side 1/4 rear molding .. 381955-S 1.50
NEW! 80-86 Clip, Lower front fender molding, 2 per side, plastic, original Ford tooling F-50074-1 2.00

GRILLE

Emblems are sold each unless noted otherwise.



82-86 "FORD" oval, chrome F-42528-1 29.85
87-90 "FORD" oval, chrome F-8213-3 34.30
91-96 "FORD" oval, chrome F-42528-1 29.85

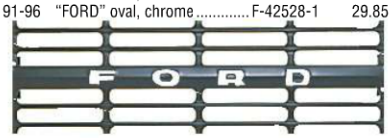

66-77 "FORD", black transfer emblem F-8A200-1A 9.95
66-77 "FORD", blue transfer emblem F-8A200-1B 9.95
66-77 "FORD", red transfer emblem F-8A200-1C 9.95
66-77 "FORD", white transfer emblem F-8A200-1E 9.95
66-77 "FORD", silver transfer emblem F-8A200-1F 9.95



67-79 Sport (67-77), "FORD" wide groove letter, ruby red center inlay with clear resin as original F-8316-2 108.95
67-79 Sport (67-77), "FORD" wide groove letter, set, w/ more economical red painted centers F-8316-2A 49.95

Emblems are sold each unless noted otherwise.



78-90 "FORD" set, repro F-16606-5 194.95

FENDER

Emblems are sold each unless noted otherwise.



87-96 "4x4" under LH head light..... F-16720-17 40.00



66-77 "Bronco" F-16098-5 29.95



67-77 "Bronco Sport"..... F-16098-11 54.95

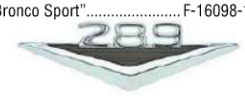

66-68 "289" V, die cast, chrome..... 16228-1AD 7.25
Mounting kit for 289 "V"..... 16228-3K 1.50

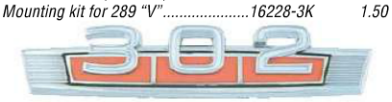

69-71 "302"..... F-16228-3 29.95



66-77 "351", custom, blue background F-16228-42A 29.95
66-77 "351", custom, red background F-16228-42B 29.95



78-79 "BRONCO CUSTOM", original Ford tooling F-16720-43 34.95



78-79 "BRONCO RANGER", original Ford tooling F-16720-44 34.95



78-79 "XLT"..... F-16720-38 29.95

TF =Truck Freight, OS =UPS Oversize.
See shipping information on inside back cover.



87-91 "CUSTOM" F-16098-3 21.73



87-91 "BRONCO" F-16720-42 40.00



87-91 "XLT" F-16098-7 37.22

FENDER, CUSTOM



66-96 "5.0", self-adhesive 16228-36A 9.00



66-96 "5.8", self-adhesive 16228-37A 9.00



66-96 "4.6", self-adhesive F-16228-40A 10.00



66-96 "5.4", self-adhesive F-16228-41A 10.00



66-96 "302 High Performance", self-adhesive 16228-39A 10.00



66-96 "351 High Performance", self-adhesive 16228-38A 10.00



66-96 "5.0 High Performance", self-adhesive F-16228-39A 10.00



66-96 "460 High Performance", self-adhesive F-16228-38B 10.00



66-96 Coiled Cobra, die cast, self-adhesive 16228-7 18.95

66-96 "Cobra JET" script, die cast, chrome, self-adhesive 16720-2B 13.95



66-68 "302" vee, die cast, chrome ... 16228-18 13.95



66-68 "5.0" vee, die cast, chrome 16228-18A 13.95

NEW! 66-68 "351" vee, die cast, chrome ... 16228-22A 14.25

NEW! 66-68 "347" vee, die cast, chrome ... 16228-23A 14.25

Mounting kit for above "V" emblems ..16228-3K 1.50



66-68 "High Performance" fits behind V emblem, (V emblem not included) 16228-3 8.50



66-68 "High Output", behind "V" emblem, custom 16228-3HO 14.95

TAILGATE

Emblems are sold each unless noted otherwise.

W/o swing-away spare:



80-86 "FORD" bright finish F-40282-3 69.95



W/swing away spare:

80-86 "FORD" set, repro F-16606-5 194.95



80-86 "XLT" F-40282-1 23.50



82-96 "Ford" oval F-42528-1 29.85

TRANSFER EMBLEM, TAILGATE

Emblems are sold each unless noted otherwise



Add color code in parenthesis to end of base number; Example F-42528-17E

66-77 "FORD", black (**A**), blue (**B**), red (**C**), white (**E**), silver (**F**) ..... F-42528-17_ 11.95

17723 MIRROR HEAD, Outside Rearview



80-86 For F-17696-8 mirror, stainless F-17723-8 82.92

80-91 For F-17696-10 mirror, stainless, 6x9" F-17723-8 82.92



82-92 For F-17696-12 aero mirror, 5x8", LH F-17723-12 89.17



84-88 For F-17682-3 aero mirror, RH F-17723-3 125.00



Catalog layout, design and primary photography by Scott Halseth, (Photo-2nd from the right). Illustrations by Kirk Hansen.

17696 MIRROR KIT, Outside Rearview



66 Round head, good repro 17696-1A 27.95
66 Round head, excellent repro, exactly as original, show quality chrome and Rotunda logo 17696-1C 48.95
66 Round head, RH, convex mirror to increase field of vision. Gaskets included, matches 17696-1C 17696-1E 48.95



NEW!

66 Custom black chrome, gaskets included 17696-1F 49.95
66 Custom black chrome, RH, convex mirror to increase field of vision, gaskets included 17696-1H 52.95
66 Custom satin chrome, gaskets included 17696-1G 49.95
66 Custom satin chrome, RH, convex mirror to increase field of vision, gaskets included 17696-1J 52.95



66-79 RH/LH, flat, manual rectangular head, good repro, chrome..... F-17696-2 43.50
66-79 RH/LH, flat, manual rectangular head, exact repro, chrome..... F-17696-2A 54.95
66-79 RH, convex, manual rectangular head, exact repro, chrome..... F-17696-2B 59.95



67 Non-remote, RH or LH, good repro 17696-4E 34.95
67 S/side, rectangular, car type, repro 17696-4D 44.95
67 S/side, rectangular, car type, convex, repro 17696-4DC 49.95



78 Stainless, 5 1/4" x 8 1/4", flat mounting brackets F-17696-7 84.18



80-89 Stainless, 6x9", dual position. F-17696-10 160.00



80-92 Aero, convex, black, 5x8", RH F-17696-11A 28.75





80-92 Aero, black, 5x8", LH F-17696-12A 28.75



85-91 Paddle swing type, black convex, 4x6", RH F-17682-5 174.25



85-91 Paddle swing type, black convex, 4x6", LH F-17682-6 191.67



92-96 RH, black, convex, manual, original F-17682-8 250.00
92-96 RH, black, convex, manual, repro F-17682-8A 49.95
92-96 LH, black, manual, repro F-17683-8A 49.95



92-96 RH, black, power, repro..... F-17682-9A 99.95
92-96 LH, black, power, repro..... F-17683-9A 99.95



92-96 RH, chrome, manual, repro.... F-17682-12A 52.50
92-96 LH, chrome, manual, repro.... F-17683-12A 52.50



92-96 RH, chrome, power, repro..... F-17682-14A 89.95
92-96 LH, chrome, power, repro..... F-17683-14A 89.95

17696 MOUNTING KIT, Outside Mirror

66 Concours, std mirror, chrome tapping screws, (2) 17696-1CK 1.00
66 Concours, stainless steel, (2). 17696-1DK 1.50
67 (2)..... 17696-4K 1.25

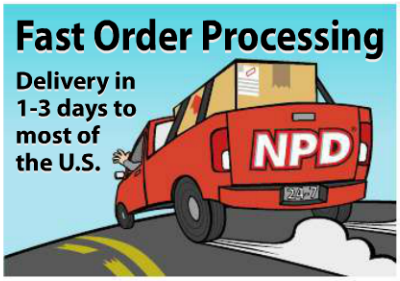



F-17697-1

17697 CUSTOM TOWING MIRROR EXTENSION

Provides towing vision without obstructing existing mirror, no tools req'd, shows blind spots, adds 6" to view, patented. Extension mirror is adjustable.

83-96 W/manual mirror, saddle mount, pair F-17697-2 63.50
92-96 W/power mirror. Does not fit flush mount mirrors, pair..... F-17697-1 63.50

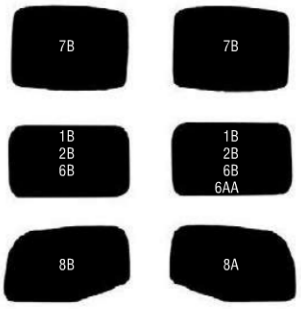

MIRROR GLASS, Outside Rearview

Replacement style. Includes redi-stick mirror adhesive pads where reqd. All are mirror only.

	LH	Price	RH	Price
66-91	5 13/32" x 4 11/16", 6 3/16" diagonal, standard:	F-17722-7B	13.50	F-17722-7B 13.50
78-91	8 7/8" x 5 7/8", 10 1/8" diagonal, w/plastic bezel:	F-17722-1B	13.50	F-17722-1B 13.50
78-91	9" x 6", 10 1/4" diagonal, w/o plastic bezel:	F-17722-2B	13.50	F-17722-2B 13.50
78-96	8" x 5", 8 5/8" diagonal, swing-lock, RH flat:	F-17722-6B	13.50	F-17722-6B 13.50
78-96	8" x 5", 8 5/8" diagonal, swing-lock, RH convex:	F-17722-6B	13.50	F-17722-6AA 21.95
92-96	8 13/16" diagonal, standard, power/manual:	F-17722-8B	13.50	F-17722-8A 21.95

17724 GASKET, Outside Mirror Mounting



66 Used w/F-17696-14/15 round head mirrors 17724-1 2.95



80-82 Upper 3 hole, used w/6x9" 2 arm swing type mirror F-17724-1 18.83



80-96 Lower 3 hole, used w/6x9" 2 arm swing type mirror F-17724-2 25.45

MIRROR, INSIDE



17690 ARM, Inside Mirror

68-69 Brushed, OE style, as original, pair 17690-1 14.95
68-69 Custom chome, pair..... 17690-1A 14.95

17698-2



17698-3

17698 BRACKET, Inside Mirror Arm

68-69 Cement-on ball type..... 17698-3 7.25
70-96 Cement-on flat type..... 17698-2 2.50



ADHESIVE, Rearview Mirror Windshield Bracket

Bonds bracket to windshield. Special two part mix is Ford specified and approved.

68-96 ..... 954-2 2.95

17700 MIRROR, Inside Rearview



66-67 Stainless, day/night, exact repro 17700-1C 31.95



73-79 Black, day/night, replacement 17700-6 42.35



80-96 Black, day/night, replacement 17700-5 48.10



92-96 Black, day/night, original 11 x 2 1/2" F-17700-7 39.18

DECALS

Decals are not shown to scale.

Air Cleaner Decal



66 170 ..... F-D303 4.00
67-68 289-2v F-D104 3.50
68-69 302-2v D-18 3.50



70 302-2v, regular fuel D-27 4.00



72-75 302-2v F-D253 4.00
73 302-2v, regular fuel D-65 4.00



74 302-2v, regular fuel F-D480 4.00
75-77 302-2v, unleaded fuel F-D716 4.00



82-83 5.8l HO, non-original F-D795 8.50
84-86 5.8l-4v HO, non-original F-D794 8.50





66-67 Autolite spark plug D-17 3.50
66-70 "FRONT" D-104 2.50





66-67 Oil Bath F-D749 4.50
67 Service instructions, Oil Bath . F-D12 4.00

Engine Compartment



71-73 A/C charge F-D435 4.00
74-78 A/C charge F-D697 4.00

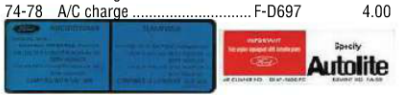

79 A/C charge F-D1281 5.00
65-72 Autolite positive terminal F-D1520 4.00



64-72 Autolite Sta-Ful battery F-D272A 5.00

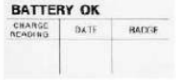



66-85 Battery test OK D-38 2.50
68-78 Caution fan F-D31 2.50



79-81 Climatiseur A/C charge F-D827 4.00
82-89 Climatiseur A/C charge F-D838 4.00

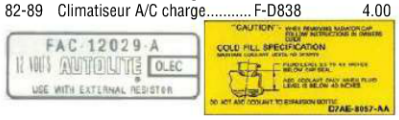

66-72 Coil D-75 4.00
77-86 Coolant caution F-D828 3.50



87-89 Coolant caution F-D839 4.00
88-89 5.0/5.8l, Drive belt F-D858 4.00



74-85 Dura-spark module F-D425 4.00

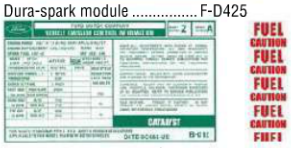

78 Emission, 302-2v, M/T, Calif... F-D1519 4.50
84-85 Fuel inj. pump & tank line F-D1451 4.00



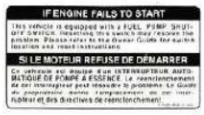

66-69 Fuel filter on pump D-62 3.00
92-94 Fuel pump switch F-D1292 4.00





78-79 Heater/A/C service instructions F-D1283 4.00
72-80 Motorcraft coil D-76 4.00





82-89 Motorcraft parts, horizontal.... F-D840 4.00
82-89 Motorcraft parts, vertical F-D842 4.00





73-78 Oil filler F-D1181 4.00
66 Oil filler cap D-57 2.50





82-89 Oil usage F-D864 4.00
76-82 Radiator caution F-D654 3.50









66 Service specifications..... D-35 2.50
71 Service specifications..... F-D308 2.50
72-80 Voltage regulator..... F-D714 4.00
66-70 Voltage regulator warning tag D-84 3.50



73-77 Tag, Htr/A/C service instructions F-D821 4.00
64-66 Tag, Rotunda anti-freeze D-89 4.00
67-73 Tag, Ford anti-freeze..... D-90 4.00

Interior Decals



66-72 Glove box oil pressure F-D951 4.00
66-70 Jack instructions..... F-D1348 4.00

Mirrors

Decals

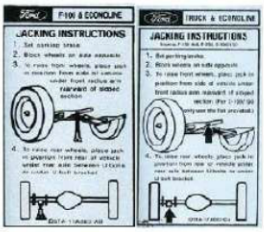

73-74 Jack instructions D3TA-AB..... F-D659 3.50
79-80 Jack instructions..... F-D1289 3.50
87-94 Jack instructions..... F-D1288 3.50

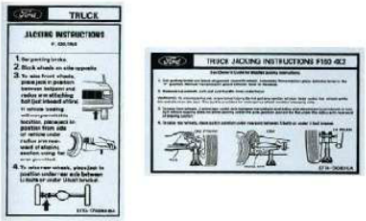

81-86 Jack instructions E1TA-BA..... F-D853 3.50
87-89 Jack instructions E7TA-GA..... F-D852 3.50



68-69 Jack safety act C8TA-A..... F-D694 2.50
75-80 Locking hub notice..... F-D1282 4.00



87-90 Sun visor overdrive instruction
..... F-D276 4.00

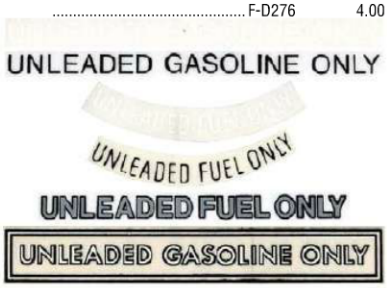

Body Decal

"Unleaded Gasoline Only"

5" straight white..... F-D8A 2.50
5" straight black..... F-D9A 2.50
5" straight black/white..... F-D13A 2.50
4" straight black/white..... F-D12A 2.50
3" curved white..... F-D10A 2.50
3" curved black..... F-D11A 2.50

LITERATURE

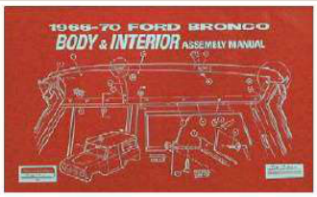

Factory Assembly Manuals

Reprint of factory manuals. A wealth of assembly information.

BODY:

66-70 Incl interior..... F-LBM-66B 31.00

ENGINE EQUIPMENT:

66 ..... L-64C 19.00
67 ..... L-64D 19.00
69 ..... L-64F 19.00



SHOP MANUAL on CD

CD's are the best alternative to printed material. These are fully scanned versions of the original shop manuals including illustrations. Easily read text or illustrations can be magnified and the sections you need printed. No more greasy hand prints obscuring the pages! Many include additional materials.

66 ..... F-LSM-66CD 54.95
67 ..... F-LSM-67CD 54.95
68 ..... F-LSM-68CD 54.95
69 ..... F-LSM-69CD 54.95
70 ..... F-LSM-70CD 54.95
71 ..... F-LSM-71CD 54.95
72 ..... F-LSM-72CD 54.95
73 ..... F-LSM-73CD 54.95
74 ..... F-LSM-74CD 54.95
75 ..... F-LSM-75CD 54.95
76 ..... F-LSM-76CD 54.95
77 ..... F-LSM-77CD 54.95
78 ..... F-LSM-78CD 54.95
79 ..... F-LSM-79CD 54.95
80 ..... F-LSM-80CD 29.95
81-89 Coming soon



SHOP MANUAL

The final word in truck maintenance! These reprints of original manuals cover almost every facet of repair from oil changes and lubrication to overhauling transmissions, engines and more.

85 3 volumes..... F-LSM-85 129.95
86 3 volumes..... F-LSM-86 129.95
88 ..... F-LSM-88 129.95

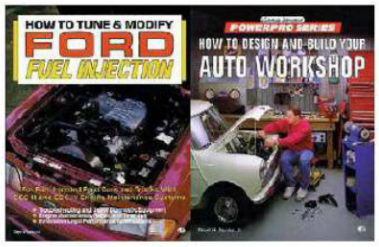

How to Tune & Modify Ford Fuel Injection

By Ben Watson. Just can't keep yourself from tinkering with your ride but are unsure as to how to go about it on a fuel injection equipped vehicle? Well look no further-this book tells all! Learn how to troubleshoot, repair, tune and modify in the tangled world of the black box. Get the most from your EEC III and EEC IV's self-diagnostic systems, learn to read codes and locate the problem. Listed are the tools required to work on these systems. One complete chapter covers performance tuning and modifications as well as dispelling the "wives tales" of so called "modifications" that just don't work and may even harm your system!! Impress your friends! Over 200 photos and illustrations in 160 pgs. softbound.

..... F-LIT-10 21.95

How to Design & Build Your Auto Work-shop

By David Jacobs. Thanks Dave, finally someone who puts into words and drawings what we've been dreaming of all of our automotive lives-the perfect workshop. But don't just dream...do. With this book build your workshop efficiently using the space you have or dig a hole, pour some concrete and start anew! Covers all aspects-electrical, heating, venting (air conditioning!!??), plumbing and pneumatic systems, basic building, framing, windows, second floors, pits, tool selection, work bench plans-Hey, what about cable TV!? Hands on advice and over 200 photos and diagrams in 144 pgs. all designed to help you construct your dream workshop.

..... F-LIT-16 19.95

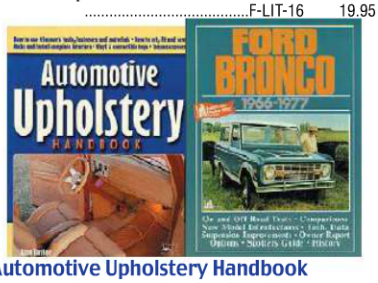

Automotive Upholstery Handbook

By Don Taylor. Learn to make and install complete interiors in your car, truck or van! Taylor teaches you how to sew like the experts and avoid costly mistakes. Learn to re-cover and build bench or bucket seats, make headliners and carpets, plus how to build boat seats from scratch! Materials are described with specific recommendations for vinyl, cloth, velvet, leather, Nimbus, panel board, etc. Indispensable for anyone interested in upholstery. Rev. ed. Sftbd., 8 1/2x11, 232 pgs., 550+ b&w ill.

..... C-LIT-239 22.95

Bronco 1966-77 & 1978-88

By Brooklands Books. A collection of magazine articles from the US and abroad chronicle the first generation Bronco from the eyes of the media at that time as opposed to an authors account written 20-30 years after the fact. Read it as it was. Road tests, vehicle comparisons, specifications, performance tests. 100 pgs with lots of photos. softbound.

1966-77 ..... F-LIT-6 24.95
1978-88 ..... F-LIT-7 19.95



Hayes Workshop Manual

The backyard mechanics shop manual. Not a simplified reprint of the factory manuals. Hayes approach to vehicle maintenance starts with obtaining their own vehicle, choosing a repair topic (such as steering pump replacement), and documenting the steps they take in the removal, repair and replacement of that part in plain English with nothing left out. Simple instructions with photos and charts can make this book your best friend.

1973-79 Ford trucks/Bronco F-LIT-20 22.50
1980-96 Ford trucks/Bronco F-LIT-21 22.50

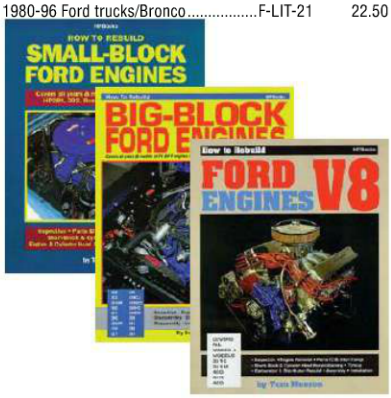

How to Rebuild Small Block Ford

By Tom Monroe. Covers 221, 260, 289, 302, 351W. How to find out what needs fixing. How to remove engine, tear down and inspect for wear, repair and recondition, assemble and reinstall. Good, solid information on these engines. 567 illustrations/photos in 158 pgs. softbound.

..... L-62 21.95

How to Rebuild Your 351C, 351M, 400, 429, 460

By Tom Monroe. Covers the 335 & 385 series engines from the mid sixties on. How to find out what needs fixing, how to identify and interchange parts, remove engine, teardown and inspect for wear, repair & recondition, assemble and reinstall. 559 illustrations/photos in 160 pgs.

..... L-62B 21.95

How to Rebuild Big Block Ford

By Steve Christ. Covers 332, 352, 390, 427, 428 in all years. How to find out what needs fixing, how to identify and interchange parts, remove engine, teardown and inspect for wear, repair & recondition, assemble and reinstall. 457 illustrations/photos in 160 pgs.

..... L-62A 21.95



Bronco 1966-77, 1978-88

By Brooklands Books. A collection of magazine articles from the US and abroad chronicle the Bronco from the eyes of the media at that time as opposed to an authors account written 20-30 years after the fact. Read it as it was. Road tests, vehicle comparisons, specifications, performance tests. 100 pgs with lots of photos. softbound.

1966-77 ..... F-LIT-6 24.95
1978-88 ..... F-LIT-7 19.95

Ford Pickup Trucks

By Steve Statham, Color pictorial tribute to the Ford pickup, brochures, ads, archival photos plus full color photos of restored trucks from Model T to current

..... F-LIT-27 14.50

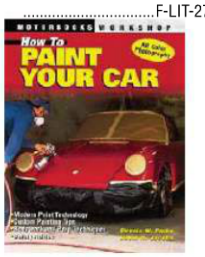

How To Paint Your Car

By Dennis W. Parks and David H. Jacobs. New and up to date information utilizing the latest in paint technology and old fashioned hand preparation. Everything you need to know and everything you need to do to have a perfect paint job on your vehicle. Full color photography.

..... L-50 19.95

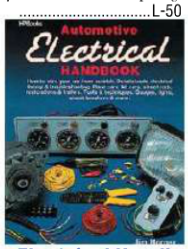

Automotive Electrical Handbook

By Jim Horner. The first complete guide to automotive wiring. Includes helpful information on how various parts work, troubleshooting, adding gauges, designing a system, 6-to-12-volt conversion and more. Also covers wiring trailers and racing cars. Complete glossary of terms and symbols. Pub. 1986. Sftbd., 8"x10", 160 pgs., 275 ill.

..... C-LIT-223 21.95

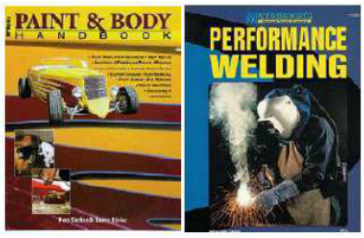

Paint and Body Handbook

By Don Taylor and Henry Hofer. Everything needed to get professional looking results. From repairing a small dent to stripping and painting a whole car. Covers tools, welding techniques, choosing and using paint and equipment. Clear, detailed photos. "...up-to-date, thorough and easy to follow." Popular Cars. 350 photos/illustration in 144 pgs. softbound

..... C-LIT-51A 21.95

Performance Welding

By Richard Finch. Planning to build the ultimate high-end race car chassis, or complex aircraft structures and engine mounts? This valuable guide to quality welding covers techniques used for Indy and NASCAR race cars, experimental aircraft and other applications requiring high-quality welds, including welding 4130 steel, stainless and aluminum. Learn how to select equipment, set up your welding shop, pre-weld jigging and fitting, and how to choose the right process and fill metal for each project. Includes chapters on the latest technology in filler metals and welding rod. Sftbd., 8-1/4"x10-5/8", 160 pgs., 250 b&w ill.

..... C-LIT-235 19.95

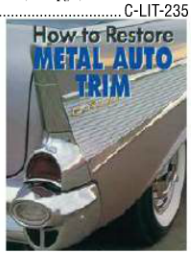

How To Restore Metal Auto Trim

By Jeff Lilly. The guide to restoring and repairing the trim on your car or truck. This detailed step-by-step restoration guide provides descriptions of all the tools, materials and parts necessary to repair the trim work. Covers repair of stainless steel and aluminum trim, including decorative strips, fenders, bumpers, hub caps, wheel covers, and door and trunk handles. Additional information is provided on chrome restoration. Sftbd., 8 1/4" x 10 5/8", 96 pgs., 150 b&w ill.

..... C-LIT-181 21.95



FORD TEXT & ILLUSTRATIONS MANUAL 1965-72, on CD

All 6000+ pages with diagrams as used by Ford dealer parts departments, researchers, restorers and collectors. PDF based. Easy to install on Windows PC based systems. Easy to use as well. Search function allows for faster reference. Fully printable if necessary

65-72 Covers all Ford passenger cars and Bronco
L-TI-6572 ..... 26.95



Ultimate Sheet Metal Fabrication

By Timothy Remus. Subtitled: Build from Scratch with Aluminum and Steel. Develop the skills you need to build your own sheet metal parts! Expert customizer Tim Remus combines his knowledge with metal-workers Steve Davis, Bob Monroe, Steve Moal and Craig Naff, to provide all the instruction you need to get the job done right. Detailed chapters cover: the right tool for the job; materials; welding; repairs; building from scratch and finish work; plus tips on how to repair and modify an existing part and starting from scratch. Sftbd., 8-1/2"x11", 144 pgs., 250 b&w ill.

.....C-LIT-236 19.95

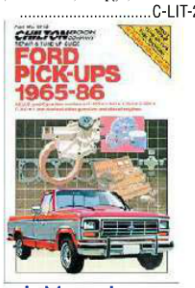

Chiltons Repair Manuals

A condensed version of the factory shop manuals-the Chiltons manuals get rid of the excess and delve into the real nitty-gritty of maintenance information and system repair.

1965-86 Truck F-LIT-17 24.95



Paintucation instructional DVD's offer a comprehensive approach to the restoration hobby. Emphasis on safety, current techniques, modern materials and equipment, combined with website tech support make them a "Must Have" addition to your reference library!

"BODY SHOP BASICS" is a great introduction to the world of paint and body work. Kevin breaks down professional and current techniques such as tool selection, dent repair, priming, sanding, blocking, painting, buffing and explains the reasons behind the procedures! This 90 minute DVD also includes important information on blending basecoat colors, metallic paint application, paint gun operation, troubleshooting, handling tips, and much more, plus important safety information.

DVD LV-6A 36.95

In "PAINT YOUR OWN CAR!", Kevin takes you through a complete paint job from start to finish, with emphasis on the detail and safety. Many time and money saving tips such as block sanding, chip repair, gun handling, and masking are revealed and explained in this 70 minute DVD, making it a valuable tool for the first time painter as well as the experienced professional.

DVD LV-6D 36.95

"COLORSANDING AND BUFFING" is a comprehensive look at buffing a car's final finish. This 60 minute DVD goes into great detail, covering and demonstrating many techniques of color sanding, buffing, paint repair, removing runs & sags and how to tell what type of surface you're dealing with. There are tricks and shortcuts on every step and procedure making this a must-have companion to the other tapes.

DVD LV-6C 36.95

"METAL PREP & RUST REPAIR" covers much more than the title suggests. Areas covered are chemical and mechanical paint stripping, light body work, hammer & dolly technique, metal finishing, rust patching & welding, surface rust removal & preparation, proper priming techniques as well as rust prevention products and procedures. Many time and money saving tricks are shown along with safety precautions and recommendations.

DVD LV-6B

36.95"BODY PANEL REPLACEMENT" Extensive 2 DVD set containsclear procedures for replacing sheet metal on your vehicle. Projects include full quarter panel replacement, leading and body solder techniques, door skin replacement. On disc two you will find partial quarter panel replacement, modern panel bonding adhesives and common rust repair, plus more!

DVD LV-6E 59.95

SALES BROCHURE

NEW!

Excellent reproductions of the original dealer sales brochures. Great for the collector and shows.



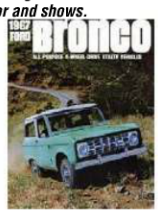

66 .....F-LSB-66B 6.75
67 .....F-LSB-67B 6.75

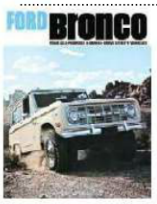

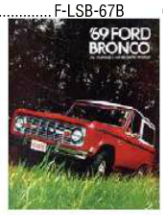

68 .....F-LSB-68B 6.75
69 .....F-LSB-69B 6.75



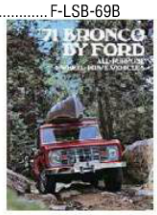

70 .....F-LSB-70B 6.75
71 .....F-LSB-71B 6.75

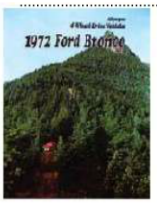



72 .....F-LSB-72B 6.75
73 .....F-LSB-73B 6.75

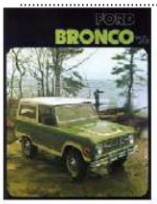



74 .....F-LSB-74B 6.75
75 .....F-LSB-75B 6.75

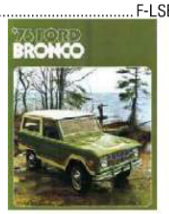

76 .....F-LSB-76B 6.75

PAINT



Formula for interior surfaces.

Custom mix PPG lacquer in 12 3/4 oz. aerosol cans with a deluxe no-clog fan-spray nozzle. For use on hard surfaces. **$8.25**

Formulated for vinyl or soft plastic surfaces.

Exact-match custom SEM vinyl dye in 12 3/4 oz. aerosol cans with a deluxe no-clog fan-spray nozzle. For use on soft or vinyl surfaces **$8.95**

Please note that these colors are formulated for Ford passenger cars and may or may not have been used on the Bronco. Years listed are only approximations.

	COLOR	HARD	VINYL
66-72	Black semi-gloss	AP-946	VP-946
72-75	Med. Blue metallic	AP-16049	VP-16049
	Dark Blue metallic	AP-15436	VP-15436
69-71	Lt. Parchment	AP-4595	VP-4595
66-73	Parchment	AP-5779	VP-5779
	Dk. Parchment	AP-5795	VP-5795
76-77	Saddle	AP-5739	VP-5739
72-76	Med. Green metallic	AP-16042	VP-16042
72-75	Med. Ginger	AP-15939	VP-15939
72-75	Dark Ginger	AP-15940	VP-15940
74	Vermillion	AP-15945	VP-15945
74	Med. Vermillion metallic	AP-16050	VP-16050

Instrument Gauge Needles

Special water based acrylic high florescent solids paint gives correct OE look with the ability to "glow" under lights, 1 ounce bottle.

Red/orange BP-0001R 2.50
White BP-0002R 2.50
Green BP-0003R 2.50

Engine Enamel, Aerosol

These OEM colors are extremely durable, heat-resistant and will not crack, peel, or discolor under the toughest conditions. Close-up spray to eliminate overspraying and sag. Adheres to any surface, fast drying and easy to apply.

Ford Corp. Dark Blue, Krylon (1923) preferred by restorers, 66-73 .....AP-EBK 6.95
Ford Corp. Dark Blue, Dupli-Color (1606), correct blue preferred by restorers, 66-73 .....AP-EBD 6.80
Ford Corp. Blue, Plasti-Coat (224), some believe this color was used as an alternative to Dark Corp. Blue in 67-69 .....AP-EBP 6.75
Ford Corporate Gray, 12 fl oz. .....AP-EFG 6.50

Hi-Temperature Paint

Withstands up to 1200°F. Won't blister, peel, discolor, burn off, or crack. Low-gloss paint is formulated to create a porcelain-like bond that improves adhesion to metal surfaces. Fast dry time, great adhesion.

Black 12 fl oz. .....AP-EHA 9.75
Aluminum 12 fl oz. .....AP-EHL 9.75
Cast Iron Gray 12 fl oz. .....AP-CGH 10.25

"Cast Blast" Paint

Returns rebuilt cast iron engine parts to their original luster. Quick-drying, durable and non-abrasive, Cast Blast prevents rust and may also be top coated with OEM colors if desired. Suitable for heads, blocks or other cast iron parts.

12 fl oz. .....AP-CG 8.95
High temp 12 fl oz. .....AP-CGH 10.25

"Alumi Blast" Paint

Give rebuilt aluminum parts a factory-fresh appearance. Applies without smudging - non-leafing pigment won't rub off after application. Suitable for interior or exterior use.

12 fl oz. .....AP-CA 7.95

Primer

Corrosion inhibitor provides deep penetrating protection from moisture and rust. Builds up to smooth out irregularities and provide a uniform base for sanding prior to all finish coat applications. Dries to touch in 15 minutes, ready for color coat within approximately 1 hour - depending on temperature and humidity (refer to can for drying specs).

Red Iron Oxide 12 fl oz. l.....AP-PR 8.50
Light Gray 12 fl oz. .....AP-PG 10.95
Black 12 fl oz. .....AP-PA 9.25
Flexible gray primer surfacer, 12 oz AP-72070N 17.50

Engine Compartment

Black 8-Hour Wrinkle .....AP-EWA 8.75

A proper semi-gloss for brackets and other parts.

Black semi-gloss 12 fl oz. .....AP-ECB 8.50

Our own mix of the "slop-gray" paint used on some apron to cowl braces, hood latch supports and other places

"Slop-Gray" 12 fl oz. .....AP-SLP 8.50

Correct metallic teal blue used on some P/S pumps.

Blue Saginaw P/S pump, 11 fl oz. .....AP-PSPE 12.25
Black semi-gloss, custom mixed to match the highly regarded original mix of Krylon 1613 .....AP-ECBK 8.50

Wheel Paint

Duplicates factory dark charcoal and argent (silver) color for styled steel wheels and wheel covers.

Argent (silver) T-19000-1 8.95
Dk Charcoal, gloss, 12 fl oz. .....AP-SSW 9.95
Dk Charcoal, semi-gloss .....AP-GPA 8.95
Black semi-gloss, 12 fl oz. .....AP-ECB 8.50

Grille

Correct colors for metal or plastic grilles or headlight extensions.

Argent (silver) T-19000-1 8.95
Dk Charcoal, semi-gloss .....AP-GPA 8.95
Black semi-gloss, 12 fl oz. .....AP-ECB 8.50

ADHESIVES, GLUES, PREPS



Plastic and Emblem Adhesive

5 oz. squeeze tube 3M8011 8.50

Weatherstrip Adhesive

Correct factory style for door, siderail, and trunk weatherstriping, 5 oz. squeeze tube
Yellow, original style 3M8001 8.95
Black 3M8008 10.95

General Adhesive Spray

Works perfectly for headliners, carpet, and more! 16-3/4 oz. aerosol can 3M8080 16.95
Super Adhesive spray, For heavy vinyls like vinyl tops, 18 oz. aerosol can.....3M8090 20.95

Brush-on Headliner Glue

Also works great for heater box seals, 4 oz. can. Use lightly-powerful stuff! HLG-1 5.60

Plastic Prep and Cleaner

Special blend of mild chemicals removes release agents, grease, wax, etc. and leaves plastic substrates clean for coating. Will not soften or distort plastic grain. Leaves no residue. 11.25 oz. aerosol .....C-CPA 10.95

Vinyl Prep & Conditioner

Vinyl dye will not adhere to improperly prepared surfaces. Vinyl Prep thoroughly cleans all vinyl surfaces, while slightly softening material, increasing contact adhesion of dye. Non-flammable, works without excessive scrubbing. 32 oz. bottle .....C-CV 23.95



Stripping Caulk Cord

Correct strip used to seal, fenders to apron, seal around screws and plugs, etc.
3/16" dia x 60', black 903-1 15.95
.19" dia x 65', gray.....903-4 19.95



Bedding and Glazing Compound

Black, non-hardening & water-resistant. Used to attach watershields (20124), also for body seams and to seal windshield w/strip to body and glass 3M8509 11.50



Prevent rust by using POR-15 on all metal surfaces. Cures to metal to stop rust from ever coming back. Will not chip, crack or peel.

Color	Gallon $143.00	Quart $44.95
Gloss black	POR-15-GBG	POR-15-GBQ
Semi-flat black	POR-15-SBG	POR-15-SBQ
Clear gloss	POR-15-CRG	POR-15-CRQ
Silver	POR-15-SLG	POR-15-SLQ



Tie-Coat is used to prime over POR-15 when you desire using another color. A tough yet sandable polyurethane primer can be applied to new or existing POR-15 without sanding! Use POR-15 and Tie Coat for a stronger, rust-free coating!

Gallon ..... POR-TCG 76.75
Quart ..... POR-TCQ 29.95



Metal Mask begs the question: is it bare metal? Metal mask looks exactly like bare metal, but with the toughness and chip resistance you'd expect from a POR product. Perfect for steering boxes, spindles, rear ends, suspension components, master cylinders, coil springs, gas tanks, and more.

Pint ..... POR-MMP 25.75





A high temperature gray paint that withstands temperatures up to 1400 F and won't burn off. Exceeds MIL-C-13370 requirements, brush or spray on (spraying requires an air gun)

1/2 pint ..... POR-FMG 18.75
Pint ..... POR-FMGP 31.00



Epoxy putty is the ultimate tool for repairs! Mix and apply by hand, but is water-based, so smoothing is easy! Cures to a rock-hard surface that can be sanded, drilled or painted. Doesn't sag or slump, and can be used on steel, plastic, concrete and damp surfaces too. Works great on household repairs, and even cures underwater! Sold in a 1-pound pack.

..... POR-EP 22.00



POR's line of engine enamels are designed to stand up to the harsh elements of your motor. Dries to a glossy finish, nonflammable and conforms to even California's strict environmental standards!

Gloss black
Quart ..... POR-EEGBQ 36.25
Pint ..... POR-EEGBP 22.00
Ford Blue, pint ..... POR-EEFBP 22.00
Ford Corporate blue, pint ..... POR-EEFCBP 22.00



Restore your steering wheel to a show-quality factory appearance with POR's restoration kit! Includes cleaner, epoxy putty, sanding block and board, scuffing pads, polishing compound, file and drill bit, instructions and even latex gloves! This product also works great for restoring dash knobs, radio buttons, gearshift knobs and other hard rubber and plastic interior parts.

..... POR-SWK 91.75



Solvent. Especially formulated for easy clean-up or thinning of POR-15. Use to thin and clean spray guns or to clean up drips or spills.

Quart POR-15-SVQ 11.75
8 oz. bottle POR-15-SV8 4.95



Metal ready. Provides the best adhesive surface for any paint or coating, including POR-15. Can be used on aluminum and shiny metal surfaces. Neatly etches surfaces and neutralizes any rust. Includes spray bottle.

Gallon ..... POR-MRG 31.75
Quart ..... POR-MRQ 16.50



Marine Clean. Cleans and degreases without leaving residues, fumes or solvents. Can be diluted with water and still be stronger than other cleaners. Includes spray bottle.

Gallon ..... POR-MCG 21.00
Quart ..... POR-MCQ 11.00



Fuel preservative and stabilizer. Prvents oxidation and rust formulation in fuel tanks when car sits and fuel breaksdown. Contains alcohol.

Pint ..... POR-FPSP 13.50

Fuel tank sealer. Bonds to metal, serals pin holes and seams, impervious to all fuels, enough for 25 gallon tank ..... POR-FTSQ 38.95

Repair kit, Fuel tank. Includes one quart of Metal Ready, qt Marine Clean, 1 qt Fuel Tank Sealer and 1 pt of Fuel Preservative/stabilizer .

..... POR-FTRK 73.25



Weld-Thru Coating
Applied to metal surfaces prior to welding which permits corrosion protection after welding between the mated areas. Minimizes MIG spatter. Add after welding for extra corrosion protection, 12 oz. spray Not 3M branded
.....3M5913 19.95

Seam-Sealer, Firm, Beige
Firm setting for all joints. Adheres to clean bare metal, primed metal and painted surfaces. Paintable in 30 min. cartridge tube 3M8505 18.50

Seam-Sealer, Brush-On, Gray
Firm setting for all joints. Adheres to clean bare metal, primed metal and painted surfaces. Paintable in 30 min. Some original seams were brushed on instead of pushed on with a tube. Brushable quart can 3M8656 38.95



3M8997
3M8864

997-1

Body Schutz Undercoating/Sound Deadener
Refer to weld/sealant manuals for locating this OE applied undercoating/sound deadener to various areas of the trucks body such as firewall, fenders 1/4's, etc.
.....3M8864 23.95

Body Schutz Spray Gun
Used to properly apply above body schutz as originally done at the factory. Reqs air compressor line and 40-60 psi
.....3M8997 124.95
Economy, cheaper alternative to 3M8997, this is not 3M branded! 997-1 26.95

Spray Undercoating & Sound Deadener
17.75 oz, closest to factory undercoating in a can! Adheres to bare or painted surfaces, textured finish is paintable. Flexible and durable.
.....964-1 9.60



DIE-ELECTRIC GREASE
3 oz. tube. For electric contacts, spark plug wire contacts. Prevents corrosion, increases electrical contact throughput. Also used on disc brake calipers.
Before connecting the plug, apply die-electric gel to the terminals. This special gel will help provide a good electrical contact and prevent corrosion. Failure to apply the gel may make the unit and/or connector prone to early failure, melting or excessive heat!
.....954-3 13.95



SEAM SEALER, Self Leveling
7 oz. cartridge, for drip rails, trunk seams, firewall/cowl and roof channels, 2 part epoxy. Requires special gun 997-2.
Standard build formula, may be too runny on hot day applications 964-2 64.95
High build formula, thicker compound won't be as runny on hot day applications.....964-2A 39.50

APPLICATOR GUN, Seam Sealer
2 part epoxy, use with part number 964-2 & 964-2A
.....997-2 96.95

ACCESSORIES & TOOLS



"Hold All" Fender Cover
is the restorer's choice. Made from a strong PVC foam product reinforced with nylon mesh. It will not harm your paint. This non-slip material will not slide off slick surfaces and it resists tools from sliding off the cover! The Hold-All measures 22" x 34" and is completely washable. It is impervious to motor oil, coolant, lacquer thinner, brake fluid, etc. This is the best fender cover we've used or seen!
.....922-2A 19.95



Q-PADS, Self-Adhesive Sound Deadener
12" x 12", great for inside doors, floors or quarters, set of 6
.....959-1 34.25



Crimping Pliers, Spark Plug Wires
Use to put a secure and consistent crimp on terminals to the plug wire. Flame Thrower 8mm wires require you to cut and crimp to length. These are just the ticket. Two crimping stages form a proper "W" crimp. Cushioned grip for comfort
.....957-1 16.25



987-4

958-1

Grease Fitting Tool
This handy multi function tool is perfect for all your zerk needs! This tool has a thread tap to chase threads, an extractor for broken zerks, and dual hex ends to install both straight and 90° fittings to prevent damage caused by wrenches.
For 1/4"-28 fittings.....987-4 14.50
For 8mm fittings 987-8 14.95

Glass Retainer Clip Installer Tool
65-73 Installs window molding clips properly so as not to over stress the delicate pin.
.....958-1 23.95



Bearing Packer
Use with any standard grease gun to force grease into bearings. Can be used to repack old bearings because it forces out old grease and packs in new or to pack new bearing completely. Packs bearings as small as 1/2" I.D. to a maximum of 4 1/4" O.D. No more messy hand packing, this tool does it for you!
.....914-1 10.50



Wheel Bearing Lock Nut Tool
Used to remove/install lock nut on hubs from 1978-96. 4 and 6 slot fits all models.....984-2 35.75
2 1/2", Used to remove and install the special rounded hex nut found on auto locking hubs
95-96 Auto locking hubs.....984-4 28.75
Ratcheting lock nut, two tools in one! Small end fits Dana 44 front axle, large end fits Dana 80 full floating rear axle, press tool into lock nut and rotate to release the ratchet inside the lock nut. A torque wrench is used when installing, use with 1/2" drive
86-94 Dana 44 front axle.....984-3 56.95



928-1A

928-1A shown modified with removal of two tabs.

930-1



Bezel Tools

69-77 Wiper switch bezel nut, F-17512-1, remove 2 tabs.
73-86 Wiper switch bezel nut, F-17512-3 & 3A, remove 2 tabs.
78-79 Headlight switch bezel nut, F-11650-3 & 5, use as is with 4 tabs.
68-77 Fuel tank selector switch bezel, F-9A389-1, remove 2 tabs.
68-77 Emergency flasher switch bezel, F-9A389-1, remove 2 tabs.
66-77 Heater switch bezel nut, F-18545-1, remove 2 tabs.
All above, modify as listed, tool has 4 tabs 928-1A 19.95
66 Head light switch bezel nut, F-11650-4
68-77 Head light switch bezel nut, F-11650-4
All above use tool as is 930-1 17.95





FLANGER GRIPS, Locking Pliers

Makes perfect step flanges for welding with no stretching or distortion.

.....911-6 28.95

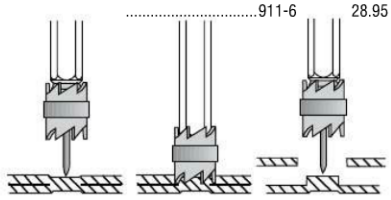



Spot Weld Cutter

Make panel replacement easier with this handy new tool! Specially designed to cut the top panel leaving the bottom panel intact for welding. Simply find and center punch the center of the spot weld and carefully drill through the top panel only. Centering pin within tool is spring loaded to help center to cutter. 900 rpm max. Has 1/4" & 5/16" hex shafts to fit most any drill and cutting head has two sides (excL 911-3).

Light duty, economy version.....911-1 7.50
Blair Heavy duty version is precision ground and hardened for superior life compared to the economy version. Adjustable depth pilot911-2 11.50
Replacement cutters, set of 3 .....911-2R 15.95
Blair Professional grade is machined from an even higher grade of steel than the HD version and is used for serious production work911-3 19.50
Replacement cutters, set of 3 .....911-3R 19.95



Coil Spring Compressor

Correct style for consistent compression of most front coil springs. Improved version with chrome moly jaws.

.....988-1 36.95





Magnetic Parts Dish

Stainless steel dish with super high-powered rubber backed magnet. Won't mar finishes and can be placed upside down and still hold nuts, bolts, sockets-whatever! Put an end to lost fasteners or having sockets roll away at the worst time! This is the tool you've been looking for-order one for your friend too.

6" round 901-1 6.95
9.5" x 5.5" rectangle, dual magnets.....901-2 9.95



Wire Wrapping Tape

Is your wiring OK but the wrapping is looking a little shabby? Now you can rewrap your original harnesses with the same nonstick tape used originally. 100 feet per roll. 2 widths available.

3/4" wide x 100 feet.....913-1 10.50
1 1/4" wide x 100 feet.....913-2 10.50



Wire Loom Cover, Flexible

Split flex tube to hide the wires on your custom truck, end the clutter for a clean custom touch. Add color code in parenthesis to end of part number shown. Example: C-8965C-2A for black. black (A), blue (E), red (C). SOLD PER FOOT. Clean up and customize your engine compartment.

1/4" I.D. .....C-8965C-2_ 0.50
1/2" I.D. .....C-8965C-4_ 0.60
3/4" I.D. .....C-8965C-5_ 0.75



Plug, Trans Output Shaft

Prevent fluid loss all over your garage, driveway and/or body during engine/transmission or driveshaft removal. Don't trust that old sandwich bag and kite string. Do it the way the pro's do with these handy plastic plugs that are properly sized to fit within the seal and around the output shaft for an easy leak free task.

1.44" O.D., 67-73 C4, 4sM/T w/small input 902-1 4.50
1.7" O.D., C6, FMX, 65-66 C4 .....902-2 4.50
Plug Set incl 5 plugs to fit 1"-2.180" output shafts 902-4 12.95



PULLEY PULLER, Power Steering Pump & Alternator

Special tool required to remove pressed on pulleys. Exactly as Ford specifies. Lifetime mfgr warranty

67-96 .....988-3 22.95



PULLEY INSTALLER, Power Steering Pump & Alternator

Special tool required to install pressed on pulleys. Exactly as Ford specifies. Lifetime mfgr warranty

67-96 .....988-4 22.95



Fuel Line Clamp Pliers

For a concours correct crimp on perma-quick style clamps.

.....934-1 29.95



Valve Stem Caps, Custom

Custom look hex chromed valve stem caps add a special look to your wheels instead of the blah black plastic caps. Beautiful chrome over solid brass. Includes removal tool disguised as a key chain!

Cobra 880-4A 21.95
Ford 880-5A 21.95



"Absorber" Speeds Car Drying

Get rid of water spotting and streaking. Incredible man-made fiber soaks the water off your car or truck so fast you'll never use a towel or a chamois again. Shaped about like a leather chamois, the Absorber fits easily in one hand and wrings out in a second. Resists chemicals & detergents to stay soft and pliable.

.....960-1A 11.50



The Original California Car Duster®

Treated cotton fibers lift dust from the surface without scratching. Easy to clean-just shake out and reuse!

Large 26" wood handle, 15" head. Comes with black vinyl carry bag. 931-1 21.95
Small, 11" plastic body and 6" head. Clamshell packaged for easy storage.....931-2 11.95



Professional Hog Ring Plier Kit

Use the right tool for the job! Forged steel pliers have negative tension to hold the hog ring in the jaws. Approximately 250 hog rings included in the kit.

.....7595-1K 28.95



Hog Ring Shearing Tool

Using a brand name wire cutter with a lifetime guarantee does nothing for your hands! They depend on crushing the wire and splitting it. This professional tool shears off the hog ring with less effort therefore protecting your hands!

.....918-1 15.75



Trim Pad Remover

Removes the plastic trim pad fasteners used in vehicles since the early 70's, without damaging pad or fastener. Will not scratch paint on hidden surfaces.

.....C-T1 5.25



Window Reveal Molding Remover

"Jiggler" removes all adhesive and rear window reveal moldings. Double-sided tool allows easy engagement of molding clips. Heat-treated, spring steel tool saves time, frustration.

.....C-T3 4.95



TOOL, Windshield Lock Bead

Professional grade, unique design allows tip to swivel 90° in either direction to work where other tools won't. Select the proper tip size (4 sizes included) and insert locking strip into eyelet.

.....979-1 17.95

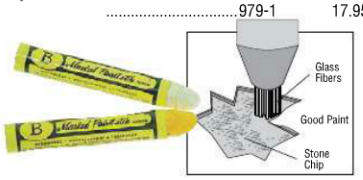

Firewall/Frame Marking Crayons

Exactly as used on the assembly line. .

Yellow, each 907-1Y 2.95
White, each 907-1W 2.95

Glass Fiber Detailer

The most precise way to clean rust, wax and dirt out of paint chips before touch-up. It's tip contains thousands of tightly bundled glass fibers which clean out the tiniest pockets of rust or built-up wax. The glass fibers also de-gloss the paint on the edge of the chip for improved paint adherence. Many other uses around the home or shop.

.....906-1 6.50



Rivet Gun, Heavy Duty

Sets rivets up to 1/4", includes nose pieces for four rivet sizes, extra long handles for leverage. Required to install N808689-S rivets to attach door handles.

.....988-2 49.95
RIVET, Peel Type, each, 2 per handle N808689-S 1.10



Window Regulator & Door Handle Clip Remover

Instant removal of clips without damage to upholstery or escutcheon plate.

.....C-T2 3.95



Removal Tool, Wiper Arm

Ever try to remove your wiper arms from the shaft only to struggle and then chip the paint? After doing so we searched for this tool to easily lift the arm from the shaft without damaging the paint...nifty!

.....956-1 5.95



Battery Mat, Anti-Corrosion

Place under battery to protect tray and apron from corrosion due to battery acid leakage. 8" x 12" w/instructions.

Black 954-1A 4.50



Removal Tool, Clutch Pilot Bearing

Uses hydraulic pressure to remove brass or bronze bushings 1/2" to 3/4" I.D. Made of case hardened steel. Not for use on steel bearings. Requires a grease gun in good condition to build high pressure.

.....914-2 14.50



Removal Tool, Wire Terminal

Removes wire terminals from block without damaging the terminal or block. Required for turn signal switch (13341) replacement plus other uses.

.....957-2 13.95



Steering Wheel Puller

A simple way to remove stubborn steering wheel without damage. Adapts to many manufacturers bolt patterns. Easy to use.

.....915-1 7.95



MASTER CUT-OFF SWITCH, Battery

Fits on negative post of battery, cuts off all power to eliminate battery drain, inc's auxillary lead to power clocks and radio station pre-sets.....957-3 8.00



Skin Zipper, Door Skin Installation Tool

Door skin installation tool, two stage tool forms edge to 45 degree angle, second stage gives a finish crimp to the shell, head is self lubricating reinforced nylon and will do about 10 doors, instructional video is included, skins a door in 10 minutes! See 911-9A for replacement head, requires standard air hammer, 60 pounds maximum air pressure.

65-73 Skin Zipper 911-9 39.95
65-73 Replacement head 911-9A 22.95



Wheel Stud Installer

Easily installs new studs into front hubs or axles. Using a ratchet or impact wrench to pull the new stud into place, position the tool over the stud shaft, tighten the lug nut against the tool to pull the stud into place,. Note that the bearing will wear with use and therefore not warranted, use of a washer and grease between lug and tool will increase tool life. Taller lug nuts will work better.

65-73 .....911-8 26.50



POR Super Starter Kits

A great way to try POR products or accomplish smaller projects! Includes a half-pint of marine clean, a half pint of metal ready, a 4 oz. can of POR-15 (covers about 12 square feet), 2 wood handle brushes and a pair of latex gloves.

Gloss black.....POR-SSKGB 19.80
Semi-flat black.....POR-SSKSB 19.80
Clear .....POR-SSKC 19.80
Silver .....POR-SSKS 19.80

See previous pages for more POR products!

MECHANIX WEAR

$20.95



Protect your hands when working on your car with Mechanix! These gloves feature a newly re-designed finger tip pattern for enhanced finger tip sensitivity and a smooth surface index finger and thumb point of contact for improved handling, while a durable and breathable Clarino palm provides a firm grip for whatever you're working on. Available in black, red and blue.

Pair	*small*	*medium*	*large*	*x large*	*2x large*
Black	802-1AS	802-1AM	802-1AL	802-1AXL	802-1AXXL
Red	-	802-1BM	802-1BL	802-1BXL	-
Blue	-	802-1CM	802-1CL	802-1CXL	-

MACHINE WASHABLE

Clarino™

"Clarino" synthetic leather is manufactured by Kuraray Co., Ltd. Japan

Advantages of "Clarino" Synthetic Leather

* Excellent quality suede surface texture
* Soft and flexible
* Breaths like leather
* Machine washable and easy care

This sports glove is made of "Clarino" synthetic leather.

KURARAY CO., LTD.
http://www.kuraray.co.jp

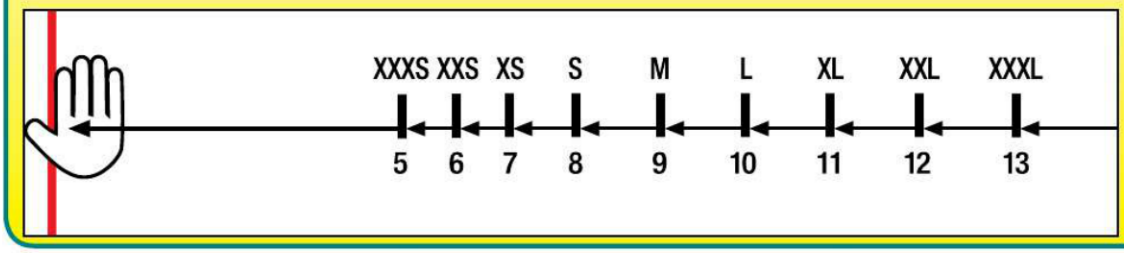

Auto DOLLY

Increase the garage mobility of your restoration project!





The Auto Dolly is placed under tires to move or turn your car, truck or trailer in any direction. The easy rolling ball-bearing castors make it simple for anyone to operate. Instead of working around your vehicle, just roll it out of your way to a more convenient spot, or slide it into those tight corners. Made from 1/4" steel plate that is primed and painted. The four HD zinc plated ball-bearing castors contain rollers made from shock resistant phenolic plastic. Each Auto Dolly can support 1500 pounds and up to 6000 pounds with four dollies. Available in two widths to fit your needs. Ideal for auto shops, hobbiests and homeowners. Set of 4.

8" x 16" plate size 989-1 159.95
12" x 16" plate size.....989-2 189.95

Not eligible towards free shipping with $300 order.
$25.00 shipping will be charged to your order.



NEW!

ROLLING RACK, Auto Dolly

Holds a set of 4 dollys (989-1 or -1), slips on to one dolly and holds the other three, powder coated finish
..... 989-10 79.95

VINYL & PLASTIC CLEANERS, POLISHES, PROTECTANTS



Plastic Cleaner and Polish by Meguiars

Finally a cure for the foggy instrument lenses! Use the cleaner to remove that foggy coating and to remove hairline scratches found on many lenses. The polish will restore, and with regular use maintain, the clarity of the lens with a scratch resistant coating. Can be used on all clear plastics! 8 oz. bottles.

Cleaner 909-1 12.25
Polish 909-2 12.25
KIT, Polish and Cleaner 909-3 19.50

RAGGTOPP ™

EXTERIOR CLOTH AND VINYL CLEANERS AND PROTECTANTS

This system was originally developed for use on convertible tops and they are the ONLY cleaners/protectants that have been tested and endorsed by Haartz and R&S, the world's leading suppliers of convertible top materials for the autmotive industry.

The top concerns for convertible tops, bras, tonneaus and other exterior vinyls and cloths are acid rain, UV rays, smog, tree sap, bird droppings, salt, tar, dirt, grease and grit. All of the environmental elements must be removed to keep exterior cloths and vinyls looking showroom new.

A regular program of keeping these materials clean through regular washings before it gets dirty, will enhance the life and durability of the material and make successive cleanings easier. Why not just wash with common car wash or household cleaners? Because these are not formulated specifically for exterior cloths and vinyls. They are excessively harsh, leave residues that attract dirt, and can actually promote deterioration of the materials, and they do not contain any kind of UV protection or stabilizers.

Over three years of product research and testing has produced a flouropolymer formula that micro-bonds to the material protecting it from the elements of nature and man. These cleaners and protectants are easy to use and can be applied in direct sun light. Any overspray can be simply wiped off with a clean cotton towel or rag. They will not harm automotive finishes, and are ozone friendly to meet California air quality standards.

The cleaner is:

- ***Plant based, environmentally safe and biodegradable.***
- ***Uses anti-oxidant formula***
- ***Safely removes soils and stains.***
- ***Will not harm paint or glass surfaces, fabric or vinyl, rubber, or chrome***
- ***Washes off easily.***



Now tested and ENDORSED by Roll-N-Lock tonneau covers!

The vinyl protectant is :

- ***Designed to extend the life and deepen the beauty of your vinyl by deepening the color tones and increasing the water repellency with each application.***
- ***Developed exclusively for exterior protection.***
- ***Contains no silicone, CFC's or petroleum distillates.***
- ***Unique patented formula will not harm automitive finishes, chrime, trim, glass, vinyl, rubber or plastic windows.***
- ***First and only vinyl protectant to contain Ciba Tinuvin UV blocking absorbers.***
- ***Repels the growth of mildew, dust, grease and dirt.***
- ***Leaves a streak free finish, not highly glossy or greasy feeling***
- ***Can be safely used on Sport Utility tops, car bras, tonneau covers, bimini tops, inflatable boats, motorcycles, PWC's, ATV's, patio furniture, spa covers and interior vinyls (especially those convertibles where the interior is as exposed as the exterior!)***

Cloth/vinyl cleaner , 16oz spray.....909-5A 11.50
Cloth protectant, 14oz aerosol 909-5B 19.75
Vinyl protectant, 16oz spray.....909-5C 16.25







TIRE STEP

Fits over tires up to 19" wide. Provides safe platform for unlimited uses-cleaning, engine work or loading. Folds flat for easy storage behind seat. Adjustable for tire width and height.
.....975-1 $43.95



Lexol Vinylex Protectant

Designed to renew vinyl, rubber and plastic. With it's DH-60 UV sunscreen, you'll get protection against fading, cracking and drying caused by age, pollution or sun. Doesn't leave a "greasy" look. Great for around the house

Lexol Leather Cleaner

pH balanced blend of non-alkaline cleaning agents leaves no residue but deep cleans leather buy loosening and suspending the embedded dirt through it's foaming action. Glycerine additive leaves the leather soft without an oily residue.

Lexol Leather Conditioner/Preservative

Helps to maintain the strength, beauty, utility and flexibility of leather. This solvent-free aqueous emulsion of organic oils is designed to adhere to leather fibers and not bleed into surronding materials. This non-toxic and odorless blend leaves the leather soft & supple without a residue.

Vinyl protectant, half liter bottle	909-4	11.50
Cleaner, half liter bottle	909-4A	11.50
Conditioner, half liter bottle	909-4B	11.50
Applicator sponges, non-abrasive and machine washable, pair	909-4C	3.95



ZDDPlus, Oil Supplement

Contains very high concentrations of the well known additive ZDDP (zinc dialkyl-dithio-phosphate) which has been the primary extreme pressure ingredient in all motor oils for over 70 years, one bottle treats 4-5 quarts of oil, stricter emission requirements on new cars have caused the removal of ZDDP from motor oils, ZDDPlus restores the extreme pressure function of the oil to the level originally required for older non-catalytic convertor equipped vehicles, why ZDDP? Because your camshaft and flat lifters need it to prevent scuffing and premature wear.

NEW!



65-73	Each	954-4	9.95
65-73	6 pack	954-4K	57.95

ABBREVIATIONS

Abbreviations used throughout this catalog:

()	Number in parenthesis notes number of pieces included.
2v	Two barrel carburetor
4v	Four barrel carburetor
4wd	Four wheel drive
4x4	Four wheel drive
12v	12 volt
abs	Type of plastic
A/C	Air conditioning
a.h.	amperes per hour
assy	Assembly
3sA/T	3 speed automatic transmission
A/T	Automatic transmission
aux.	Auxiliary
b.c.	Bolt circle
b4	Before
chrg	Charge (core charge)
cp	candlepower
cyl.	Cylinder(s)
CM	Cruise-O-Matic transmission
concours	Exactly as put on at the factory
cw	Clockwise
c/cw	Counter-clockwise
DI	Direct Injection
dia.	Diameter
diff.	Differential
DMF	Dual Mass Flywheel (diesel eng's)
eng.	Engine(s)
351M	Engine-351 Modified, updated Cleveland design; fuel pump mounting holes aligned vertically.
351W	Engine-351 Windsor, similar to 289, 302's; fuel pump mounting holes aligned horizonally.
excl	Excluding (an exception or omission)
ev/em	Evaporative emissions
FA	Front axle
FI	Fuel Injection
GTW	Gross trailer weight
GVW	Gross vehicle weight
HD	Heavy duty
HP	Horsepower (also hp)
ID	Inside diameter or Identifcation code
incl	Include(s)
KTP	Kentuck Truck Plant (Louisville)
l	Liter, metric engine displacement
LH	Left hand, driver's side
M	Metric measurement of bolt sizes
MB	Manual brakes
M/S	Manual steering
M/T	Manual transmission
3sM/T	3 speed manual transmission
4sM/T	4 speed manual transmission
NOS	New Old Stock-original Ford parts
NP	New Process (transmissions, transfer cases)
npt	National Pipe Thread
OAL	Over all length
O.D.	Outside diameter
OD	Overdrive transmission
OHV	Overhead valve
Orig.	Original, a part from the original supplier
OS	UPS Oversize item
PB	Power brakes
pcs	Pieces
pkg.	Package
P/S	Power steering
RA	Rear axle
ratio	Axle gear ratio
Repl'mt	Replacement part, not necessarily exactly as original
repro	Reproduction of original part (see also concours)
reqd	Required
reqs	Requires
res.	Reservoir
RH	Right hand, passenger side
ser#	Vehicle serial number, found on ID tag on drivers door jamb
SPC	Single piston brake calipers
susp.	Suspension
s/c	Standard cooling
sx/c	Super extra cooling (see also x/c)
TF	Truck Freight item
T/E	Thermactor emissions
thd	Thread size
TK	Thickness
TW	Tongue weight
u/l	Upper or lower
v	volts in electrical or venturi for carburetors
w	watts
W/	Used with (not to be confused with "includes")
W/o	Used without
x/c	Extra cooling (see also sx/c)
#	Pounds-when following a number (8500# = 8500 lbs)
<	Less than
>	Greater than

NPD® WILL SEND A PARTS CATALOG OR CD TO YOU OR A FRIEND FREE!

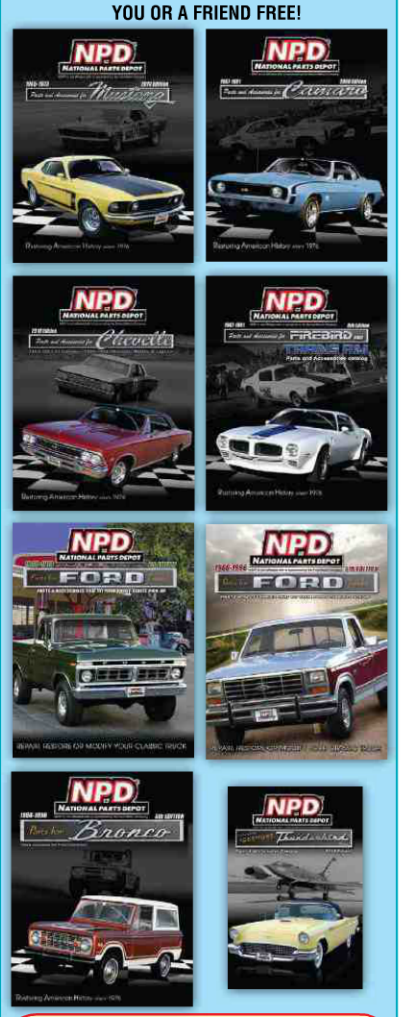

Just fill out this request form or call 877-506-1212 toll free (24hrs- 7 days)

NAME_____

ADDRESS_____

_____

CITY_____

STATE_____ZIP_____

I'm interested in receiving to following catalog:

- ❑ 1965-1973 Mustang
- ❑ 1955-1957 Thunderbird
- ❑ 1948-1979 Ford F-series Truck
- ❑ 1980-1996 Ford F-series Truck
- ❑ 1966-1996 Ford Bronco
- ❑ 1967-1981 Camaro
- ❑ 1964-1983 Chevelle/Malibu/ to 87 El Camino
- ❑ 1967-1981 Firebird/Trans-Am
- ❑ All on CD (in PDF format)

CALL AND ASK OR SEND YOUR REQUEST TO:
NPD® CATALOG REQUEST
900 SW 38th AVE.
OCALA, FLORIDA 34474



NPD®
NATIONAL PARTS DEPOT

We hate backorders as much as you do. *That's why we have over a 1/4 million sq. ft. of warehouse space to accommodate the most comprehensive inventory anywhere. So while other shops are mailing a purchase order to another company to drop ship your part, we're pulling and packing the part for shipment directly to you! Our goal: Orders taken before noon weekdays are shipped the same day. And with* ***fast order processing*** *your order should arrive in 1-3 days to most of the U.S.*

We're here when you need us. *We recognize the fact that it is impractical for you to always place your order within banker's hours. For that reason our* ***retail store's*** *walk-in counters are open Monday through Friday 8am to 9pm and Saturday and Sunday from 8am to 5pm. For your further convenience we have a sales staff available 24 hours a day/7 days a week when you call on one of our* ***toll-free order lines****. Many payment options exist including Master Card, VISA, Discover and American Express.*

Incredible Selection. *We strive to make available every restoration part that is practical. We are constantly evaluating new parts and re-evaluating existing parts to assure our customers are getting the highest quality and most accurate pieces available. As enthusiasts ourselves we use what we sell and we'll* ***only accept the best****! We are fortunate to have suppliers and manufacturers that feel the same way and are willing to listen to suggested changes or ideas for new parts that are needed by our customers. From the smallest decal that is highly detailed and concours correct to the latest trends in modifications such as performance suspensions or transmission coolers...****we have it all!***











NPD® Thank You!

Built For You

Accurate and courteous service.
At NPD® we strive to maintain the highest level of ***professional service and appearance****. We want your experience with us to be a positive one and that begins with a friendly and knowledgable sales associate who is ready to help you. We will build your order, confirm price and availability, estimate shipping and delivery times. And as always we enjoy seeing your before and after photos!*







We support and thank those who put it on the line to protect our Freedom.

We appreciate your business.
Thank You *for considering National Parts Depot as* ***your parts supplier.***









NPD® Thank You

Accelerator parts 67-68
Adhesives 146
Air cleaner assy 66
Air conditioning 103-105
Alternator 85
Antenna 13
Armrest pad 16
Ash tra 13
Axle 79-84
  Identification codes 80
Battery 86-87
Bearing
  Axle 79-84
  Engine 61-66
Belts, Fan 52-53
Body
  Bolt kit 108
  Mounting pads 117
  Panels, by year 108-118
Books 143-145
Booster, Power brake 30
Boot, shift lever 74, 75
Bra
  Grille & hood 120
Bracket
  Bumper 120, 121
  Rear view mirror 141
Brake lights 98-99
Brake lines, prebent 25
Brake parts
  Charts, by year 31-33
  Disc hydraulic 28-29
  Disc mechanical 29
  Drum hydraulic 27
  Drum mechanical 28
  General 24-25
  Lines, prebent 25
  Parking 30-31
  Power 30
Breather cap 59
Brush guard
  Grille 121
Bug deflectors 118
Bulbs, light 93, 96, 97, 98
Bumper
  Arms 120-121
  Front 120-121
  Guards 120-121
  Rear 120-121
  Rubber 128-136
Cable
  Accelerator 68
  Battery 86, 87
  Heater control 102, 103
  Speedometer 79
  Park Brake 30, 31
Caliper, Disc brake 28
Cap
  Master cylinder 26
  Radiator 48-49
  Valve cover breather 59
Carburetor 66
Cargo
  Bag, roof 122
  Nets 122
Carpet 19
Caulking cord 146
CD Changer 13
Chamois 150
Charger, battery 86
Choke 67
Cigar Lighter 12
Cleaner
  Plastics 152
  Vinyl 152
  Leather 152
Clutch
  A/C 103
  Fan 50
  Transmission 76, 77
  Linkage 75-76
Coat hook 18
Coil
  Ignition 88, 91
  Spring 38
Compressor, A/C 104
Condensor, A/C 104
Cooling 47-53
Cover
  Truck 22
  Tire 24
  Wheel 23
Conversion kit
  Digital dash gauge 10
  Engine 54
  Power window 125
Cowl vent cover 119
Cylinder, wheel 27
Damper, crank 57
Dash
  Digital conversion 10
  Emblems 10
  Pad 9
  Trim Panels 9, 10, 14
Decal
  Air cleaner 142
  Engine 142
  Grille 106, 138
  Tailgate 139
Defroster duct 103
Divider, pet 21
Distributor 88-91
  Cap 88, 89, 90, 91
Door
  Arm rest 16
  Hinge 126
  Latch 126-127
  Shell/Skin, by year 110, 115
  Side window 125
  Switches 16, 100
  Trim, interior 14-17
  Vent window 124-125
  Weatherstrip 129, 132-134
  Panels 14-15
Driveshaft 78
Emblem
  Exterior 138-139
  Interior 10
  Steering wheel 44
Emergency flashers 95
Emissions system 59-60
End link, sway bar 40, 41
Engine 53-62
  Bolt kit 54
Evaporator, A/C 104
Exhaust
  Flowmaster kits 71
  Headers 71
  Manifold 71
  Bolt kit 71
Fan, electric cooling 51
Fan shroud 49-50
Fender
  Apron 109, 112
  Cover 148
  Emblems 138-139
  Flares, fender
  Bushwacker 119
  Extenders 119
  Front 109, 112
Filler neck, fuel 64
Filter
  Air cleaner 66
  K&N filters 66
  Oil 56
  Fuel 65
Firewall cover 9
Flares, fender 119
Floor mat
  Accessory 20
  Carpet 19
  Rubber 19
Floor pan 110, 114
Flywheel 57
Fog lights 96-97
Freeze plugs 55
Fuel line, prebent 64, 65
Fuel pump 65
Fuel tank 62-63
Gas
  Cap 64
  Tank 62-63
Gaskets
  Engine 60-61
  Lens See lights
  Heater 103, 128
Gauge pods 18
Gear, speedometer 79
Glass
  Door 125
  Rear 127
  Vent 124
  Windshield 124
Glove box 13-14
Grille, by year 106-108
  Bars 121
  Bra 120
  Custom tube, Stull 108
  Emblems 138
Handle
  Door, inside 17
  Door, outside 127
  Parking brake 31
  Vent window 124
  Window 17
Headers 71
Headlights 93-94
  Switch 12
Headliner 18
Heater
  Blower motor 103
  Controls 102, 103
  Core 102
  Hose 102
Hinge
  Door 126
  Hood 114
  Tailgate/liftgate 111, 116-117
Hitch-Haul® racks 122
Hitch
  Balls 123
  Convert A Balls 123
  Covers 123
  Cushions 123
  Pintles 123
  Receivers 123
Hood 109, 113
  Deflectors 118
Horn ring/pad 44
Horns 100
Hose
  A/C 104, 105
  Radiator 51
Ignitor by Pertronix 91
Instrument cluster 10
Insulation
  Cab 21
  Floor 21
  Headliner 21
  Sound & temperature 21
Jack assy 23-24
Knob
  Gear shift 74, 75
  Door lock 16
  Heater control 102
  Window handle 17
Latch
  Door 126-127
  Hood 109, 114
  Tailgate/liftgate 111, 116-117
Lens
  Dome light 100
  Fog light 96-97
  Head light 93-94
  Instrument cluster 10
  License light 99
  Marker light 97-98
  Parking light 95
  Tail light 98-99
License light 99
Liftgate111
  Weatherstripping 135
Lighting
  Cargo 100
  Courtesy 100
  Dome 100
  Driving 96-97
  Fog 96-97
  Head light 93-94
  Marker light 92, 98
  Off road KC 96-97
  Park 95
  Roof 96
  Tail light 98-99
Literature 143-145
Locks
  Truck cover 22
  Door 136
  Door/ignition kits 136
  Receiver 123
  Tailgate 136
  Trailer 123
Lug nuts 23
Manuals 143
Marker lights 97-98
Mirror
  Inside 141-142
  Outside 139-141
Module, ignition 89
Moldings, by year 137-138
  Scuff plate 19
Motor Mount 54-55
Mud flaps 120
Nets
  Cargo 122
Oil
  Cooler
  Engine 55
  Transmission 72-73
  Filter
  engine 56
  transmission 72
  Pan 72
  Pump, engine 61-62
Ordering information 163
Ornaments
  Exterior 138-139
  Interior 10
Pad
  Armrest 16
  Brake pedal 25
  Clutch pedal 25
  Steering wheel 44
Paint
  Engine 146
  Interior 146
  POR-15 products 147, 151
  Vinyl dye 146
Parking brake 30, 31
Parking lights 95
Pertronix ignitor 91
Pillar trim 18
Pintle Hooks/mounts 123
Power brake parts 30
Power steering
  Pump 45-46
  Hose 46
Pressure plate 76, 77
Pulley, alternator 85
Pump
  Oil, engine 61-62
  Power steering 45-46
  Windshield washer 102
Quarter panel 111, 116
Quarter trims 18
Upholstery
  Seat 4-6
Radiator
  Applications 47
  Cap 48-49
  Clamps 51
  Fan shroud 49-50
  Hoses 51
  Support 109, 113
Radio 13
Rebuild kit, carb 66
Receiver
  Balls 123
  Caps 123
  Locks 123
  Mounts 123
  Wiring 123
Regulator
  Alternator 85-86
  Instrument voltage 10
  Window 125
Reservoir, Washer 102
Ring and pinion gear 84
Rocker panel 110, 114
Roof Bag 122
Scuff plate 19
Seals 128-136
Seat
  Belts 8
  Foam 6
  Parts 6-7
  Upholstery 4-6
Sender
  Fuel level 63
  Oil Pressure 56
  Temperature 52
Shackle, leaf sprg 39
Sheet metal 108-116
Shifter
  A/T handle 74
  M/T handle 75
  Transfer case 74
Shock absorber 40
Solenoid, starter relay 88
Sound deadener
  Cab 21
  Spray-on 148
Spare tire 23-24
Spark plug wires 90, 91
Speedometer parts 78-79
Splash guards 120
Spot weld cutter 149
Springs
  Airlift® kits 38
  Coil 38
  Leaf 38-39
Stabilizer bar 40-41
Starter 88
Steering
  Ball Joints 35-36, 41
  Column 44-45
  Gear 45
  Power 45-46
  Shaft 42-43
  Stabilizer 45
  Tie rods 35-36, 42
  Wheel 42-44
Step plates, carpet 19
Stud, wheel 23, 31-33
Sun visor 17-18
Suspension
  Illustrations 35-36
  Parts list by year 35-36
  Performance 37, 39, 40
Sway bar 40-41
  Performance, Addco 40
Switch
  A/C 105
  Backup light 96
  Brake light 98
  Courtesy light 100
  Emergency flasher 95
  Fog light 96, 97
  Head light 12
  Head light dimmer 94
  Heater blower 103
  Ignition 12
  Neutral safety 74
  Turn signal 95
  Wiper/washer 101
Tailgate 111, 116-117
  Decals 139
  Emblems 137
  Handle 111, 117
  Hinge 111, 117
  Latches 111, 117
Tail lights, by year 98-99
  Covers 118
Thermostat 52
Tie downs
  Straps 122
Timing chain 61-62
Timing Cover 55
Tools 148-152
  Clutch alignment 77
  Trans output plug 77, 149
Tow
  Hooks 122
  Mirror extensions 141
  Straps 122
Track bar 41
Transfer case 74
Transmission
  Automatic 72-74
  B&M performance 72-73
  Coolers 72-73
  Manual 74-77
  Clutch 76-77
Truck shipment info 109, 163
Turn signal 95-96
U-joint 78
Valve cover 58
Vent window 124-125
Vinyl dye 146
Visor 17-18
Voltage regulator 85-86
Washer bag/bottle 102
Water pump 51
Watershields, door 15
Weatherstrip
  Door 129, 132-134
  Quarter window 130, 132-134
  Rear window 131, 135
  Vent window 129, 132-134
Wheel cover 23
Wheelhouse 110, 111, 113, 116
Windage tray 56
Window
  Door 125
  Graphics 118
  Rear 127
  Regulator 125
  Shades 119
  Vent 124
  Weatherstripping 129-135
  Windshield 129, 132-134
Wipers 100-102
Wire harnesses 92

Ordering Policies & Information

All Toll-free Lines Open 24-hours a day!

Walk-in hours: Mon-Fri 8am-9pm; Sat & Sun 8am-5pm



Florida Depot
900 S.W. 38th Ave.,
Ocala, FL 34474-1883
Local **352-861-8700**
Toll-free all states **800-874-7595**
Fax **352-861-8706**



N.Carolina Depot
7000 MacFarlane Blvd,
Charlotte, NC 28262-3425
Local **704-331-0900**
Toll-free all states **800-368-6451**
Fax **704-335-8866**



Michigan Depot
2435 S. Haggerty Road,
Canton, MI 48188-2021
Local **734-397-4569**
Toll-free all states **800-521-6104**
Fax **734-397-4683**

To order: Simply phone or mail your order to our store nearest you. Experienced classic parts specialists will handle your order and provide assistance. Be sure to supply us with our item numbers for faster order handling. Some items are ordered by description alone (i.e., upholstery) in which case we'll need the year, color and bodystyle of your vehicle. All orders may be paid by VISA, MasterCard, Discover, Amex or Western Union "Quick Collect". Mail orders may also be paid with a cashiers check. Personal checks may delay your order 2-3 weeks. **Foreign orders:** (outside the territorial U.S. or Canada) contact our Foreign Order Desk at at our Florida Depot or E-mail at "export@npdlink.com".

Shipping charges: Orders over $300.00 and destined within the lower 48 states: We pay the UPS ground-shipping charges. (Western Union fee not included; core charges do not count towards free shipping calculation.) Items that are UPS oversize 1 or 2 (most items denoted as "OS" in catalog) will be subject to an additional $12.00 per item and are not included in the free shipping offer.

Orders below $300.00 and destined within the lower 48 states: Florida, California, Michigan or North Carolina residents add 5%, but not less than our $8.00 minimum. Residents of all other states add 10%, but not less than our $8.00 minimum. Do not include core charges when calculating shipping charge. • Items that are UPS oversize 1 or 2 (most items denoted as "OS" in catalog) will be subject to an additional $12.00 per item and are not included in the free shipping offer.

Orders destined for Canada: Add 20% for shipping but not less than $15.00 for minimum shipping. Oversized items will be subject to an additional $12.00 per item. The $300.00 free shipping policy does not apply. US funds only.

Orders destined outside the lower 48 states and Canada: We will charge the actual cost of shipping your order. The $300.00 free shipping policy does not apply. US funds only.

Items too large for UPS such as hoods or fenders must be shipped by an LTL carrier. Call the NPD location closest to you for the best freight quote.

Optional shipping methods: UPS 3-Day Guaranteed Ground, 2nd Day Air, Next Day Air, FedEx and parcel post shipping is available at actual cost. Rates vary according to weight.

Paying by Western Union "Quick Collect": This convenient new payment method eliminates the unpopular hassles of C.O.D. transactions. No more waiting in long bank lines for cashiers checks, hanging around the house to meet UPS drivers or paying multiple COD charges for multi-box orders. **How does Quick Collect work?** When you place your order by phone, fax or mail, an NPD® sales representitive will provide you with a total amount due, a city code number and our invoice number. Go to your nearest Western Union outlet (*They're everywhere! Call 800-325-6000 for the one nearest you*) and fill out a blue **"Quick Collect"** form, completing the required information, along with the numbers we provide. You'll pay for your entire order right there in cash and Western Union will charge an additional $12.95. Shortly afterward, a check for your order will be printed out at our office and your shipment will be on its way.

Catalog pricing: All prices are current at the time of printing. Prices, specifications, stated suppliers or manufacturers are subject to change without notice.

Backorders: We attempt to fill every order within 24-hours, but if an item is out of stock it will be placed on our backorder service and shipped as soon as possible. Most customers prefer to pay for backordered items at the time the order is initially processed, however, if you do not wish to pay for backordered items until they are shipped, or you wish to cancel an existing backorder to receive a refund, simply advise your salesperson.

Refused shipments: Shipping or other costs incurred by us while attempting to deliver merchandise that is refused will be billed to the customer.

Store hours: All NPD® Toll-free order lines are open 24 hours a day, 7 days a week. Our walk-in counters are open M-F 8am-9pm; Sat & Sun 8am-5pm. We are closed for the observance of New Years, Memorial Day, Independence Day, Labor Day, Thanksgiving and Christmas. Abbreviated store hours on Christmas Eve and New Years Eve.

Items Damaged in transit are the responsibility of the carrier. Please retain all packing materials and immediately contact the carrier (i.e., UPS, U.S. Postal Service, truck line) to file a damage claim. *Please do not return* damaged items to NPD®. We will, however, be happy to assist you in filing your claim with the carrier.

General policy on core returns: ✔ Returned core must be rebuild-able. ✔ No broken or missing parts, cracked cases, deeply grooved surfaces etc. ✔ Moveable items must not be frozen, locked or rusted solid. ✔ No cases with torch cuts. ✔ No welded or bent shafts, ears etc. ✔ Shafts, splines, keyways & threads must be good. ✔ No disassembled cores credited. ✔ Returned core must be same part as rebuilt unit purchased. ✔ Returned core **must** be returned in same box as rebuilt unit purchased. ✔ Drain all fluids prior to return and wrap in plastic to prevent leakage. ✔ Core returnability will be determined by the remanufacturer and/or NPD®.
Core charges do not reflect the value of the part, they are an incentive to return the part to us. **Junk parts** sent as cores **cannot** be returned and **will not receive** core credit.

Returns-our guarantee: If you are dissatisfied with an item, please contact the salesperson listed on your invoice to obtain return authorization. **Missing or damaged items must be reported within 24 hours of delivery.** After speaking with our agent, we request that you also enclose a brief note describing the problem with the returned merchandise. We will accept the return of any unsatisfactory item provided it is unused, in resalable condition and returned with a copy of your invoice within 30 days of the invoice date. Return of items ordered in error may be subject to a 20% restocking fee. Fluids must be drained prior to return. Please do not return merchandise to us C.O.D. or postage due. Electrical parts, stripes, literature, items sold per foot (windlace, conduit, PS hose) and videos are not returnable. If NPD® is at fault in any way we will promptly refund your return freight charges. NPD® is NOT responsible for air-freight charges or boxing/packing services. Only UPS ground rates apply.

Important Notice
By placing this order with Auto Craft Investments Inc. (d/b/a National Parts Depot) customer agrees to the following terms and conditions regarding venue for any dispute arising out of this transaction.
1) Unless otherwise prohibited by law, venue is limited to one of the following locations: Ocala Florida, Canton Michigan, Ventura California, Charlotte North Carolina.
2) All disputes will be settled by application of the laws of the specific state that is selected for venue.

Thanks: NPD® has been growing steadily since its founding in 1976. We are proud to be one of the largest firms of our kind, and we're even prouder of our reputation for first-rate customer service. Please don't hesitate to tell us if you feel there is any way we can improve our service, product line or catalog.

The seller, National Parts Depot, hereby disclaims all warranties, either expressed or implied, including any warranty of mechantability or fitness for a particular purpose, and National Parts Depot hereby neither assumes nor authorizes any person to assume for it any liability in connection with the sale of this merchandise.

Vehicle Information	Year	BRONCO	Additional info	Have you ordered from NPD® before? ❍ Yes ❍ No Bronco Fifth edition
Cab (circle): Pickup, Wagon, Sport	4x2 4x4	Engine, Trans, axle and other info		Source Code

QTY	Item Number	Description: LH (driver)/ RH (pass), Color, Bodystyle	Price		Price X Qty	

Customer Information:

▲ Name

▲ Home Address (UPS will not deliver to a Post Office Box)

▲ City ▲ State or Providence ▲ Zip Code

( ) - - ( ) - -

▲ Home Phone - include area code ▲ Office or Daytime Phone - include area code

*FREE Shipping on UPS orders over $300

▼ If Shipping Address is Different From Above Please Complete Below ▼

▲ Name ▲ Company Name or In Care Of:

▲ Shipping Address (if different from home address) Note:UPS will not deliver to a Post Office Box

▲ City ▲ State or Providence ▲ Zip Code

SUBTOTAL		
TAX	Residents in MI add 6%, FL 6.5%, NC 7.5%, CA 7.25%	
Shipping * $8.00 minimum	FREE shipping on UPS orders over $300.00 See shipping note below	
AK, HI, PR, Foreign: Actual shipping**		
FL, CA, MI, NC residents: add 5%		
ALL OTHER STATES: add 10%		
Canadian shipments:add 20%		
Oversize charges		
GRAND TOTAL		

Payment Method: (✓ check appropriate box)

☐MasterCard ☐ VISA ☐ Discover ☐ AMEX ☐WesternUnion ☐Postal money order

▼ CREDIT CARD NUMBER

▲Security Code (3-4 digit code found on back of card)

I have read the ordering policies and information section on the reverse side of this order form.

EXP DATE MONTH / YEAR

AUTHORIZING SIGNATURE - *required* ▲ Please make checks payable to: National Parts Depot

Need a new catalog for yourself or a friend? ✓ Check box for yes.

- ☐1948-1979 Ford F-series Truck
- ☐1980-1996 Ford F-series Truck
- ☐1966-1996 Ford Bronco
- ☐1965-1973 Ford Mustang
- ☐1955-1957 Ford Thunderbird
- ☐1967-1981 Chevrolet Camaro
- ☐1967-1981 Pontiac Firebird
- ☐1964-1987 Chevrolet Chevelle, El Camino
- ☐ALL on CD in PDF format



***Shipping reminder:** We pay the shipping on UPS-able ground orders exceeding $300 and destined within the lower 48 states, except on items noted. Core charges do not count towards free UPS shipping, or in calculating freight charges. Items too large for UPS must be shipped by an LTL carrier. Call the NPD location closest to you for the best freight quote.

****Alaska, Hawaii, Puerto Rico & foriegn orders are charged actual cost of shipping the order. See ordering policies on reverse side for details of shipping rates and for special Canadian shipping charges.**

The seller, National Parts Depot, hereby expressly disclaims all warranties, either expressed or implied, including any implied warranty of mechantability or fitness for a particular purpose, and National Parts Depot hereby neither assumes nor authorizes any other person to assume for it any liability in connection with the sale of the merchandise.

 Order toll free 24 hrs a day, 7 days a week! **Michigan Depot** local 734-397-4569, tollfree 800-521-6104

Ordering Policies & Information

All Toll-free Lines Open 24-hours a day!

Walk-in hours: Mon-Fri 8am-9pm; Sat & Sun 8am-5pm



Florida Depot

900 S.W. 38th Ave.,
Ocala, FL 34474-1883
Local **352-861-8700**
Toll-free all states **800-874-7595**
Fax **352-861-8706**



N.Carolina Depot

7000 MacFarlane Blvd,
Charlotte, NC 28262-3425
Local **704-331-0900**
Toll-free all states **800-368-6451**
Fax **704-335-8866**



Michigan Depot

2435 S. Haggerty Road,
Canton, MI 48188-2021
Local **734-397-4569**
Toll-free all states **800-521-6104**
Fax **734-397-4683**

To order: Simply phone or mail your order to our store nearest you. Experienced classic parts specialists will handle your order and provide assistance. Be sure to supply us with our item numbers for faster order handling. Some items are ordered by description alone (i.e., upholstery) in which case we'll need the year, color and bodystyle of your vehicle. All orders may be paid by VISA, MasterCard, Discover, Amex or Western Union "Quick Collect". Mail orders may also be paid with a cashiers check. Personal checks may delay your order 2-3 weeks. **Foreign orders:** (outside the territorial U.S. or Canada) contact our Foreign Order Desk at at our Florida Depot or E-mail at "export@npdlink.com".

Shipping charges: Orders over $300.00 and destined within the lower 48 states: We pay the UPS ground-shipping charges. (Western Union fee not included; core charges do not count towards free shipping calculation.) Items that are UPS oversize 1 or 2 (most items denoted as "OS" in catalog) will be subject to an additional $12.00 per item and are not included in the free shipping offer.

Orders below $300.00 and destined within the lower 48 states: Florida, California, Michigan or North Carolina residents add 5%, but not less than our $8.00 minimum. Residents of all other states add 10%, but not less than our $8.00 minimum. Do not include core charges when calculating shipping charge. • Items that are UPS oversize 1 or 2 (most items denoted as "OS" in catalog) will be subject to an additional $12.00 per item and are not included in the free shipping offer.

Orders destined for Canada: Add 20% for shipping but not less than $15.00 for minimum shipping. Oversized items will be subject to an additional $12.00 per item. The $300.00 free shipping policy does not apply. US funds only.

Orders destined outside the lower 48 states and Canada: We will charge the actual cost of shipping your order. The $300.00 free shipping policy does not apply. US funds only.

Items too large for UPS such as hoods or fenders must be shipped by an LTL carrier. Call the NPD location closest to you for the best freight quote.

Optional shipping methods: UPS 3-Day Guaranteed Ground, 2nd Day Air, Next Day Air, FedEx and parcel post shipping is available at actual cost. Rates vary according to weight.

Paying by Western Union "Quick Collect": This convenient new payment method eliminates the unpopular hassles of C.O.D. transactions. No more waiting in long bank lines for cashiers checks, hanging around the house to meet UPS drivers or paying multiple COD charges for multi-box orders. **How does Quick Collect work?** When you place your order by phone, fax or mail, an NPD® sales representitive will provide you with a total amount due, a city code number and our invoice number. Go to your nearest Western Union outlet (*They're everywhere! Call 800-325-6000 for the one nearest you*) and fill out a blue **"Quick Collect"** form, completing the required information, along with the numbers we provide. You'll pay for your entire order right there in cash and Western Union will charge an additional $12.95. Shortly afterward, a check for your order will be printed out at our office and your shipment will be on its way.

Catalog pricing: All prices are current at the time of printing. Prices, specifications, stated suppliers or manufacturers are subject to change without notice.

Backorders: We attempt to fill every order within 24-hours, but if an item is out of stock it will be placed on our backorder service and shipped as soon as possible. Most customers prefer to pay for backordered items at the time the order is initially processed, however, if you do not wish to pay for backordered items until they are shipped, or you wish to cancel an existing backorder to receive a refund, simply advise your salesperson.

Refused shipments: Shipping or other costs incurred by us while attempting to deliver merchandise that is refused will be billed to the customer.

Store hours: All NPD® Toll-free order lines are open 24 hours a day, 7 days a week. Our walk-in counters are open M-F 8am-9pm; Sat & Sun 8am-5pm. We are closed for the observance of New Years, Memorial Day, Independence Day, Labor Day, Thanksgiving and Christmas. Abbreviated store hours on Christmas Eve and New Years Eve.

Items Damaged in transit are the responsibility of the carrier. Please retain all packing materials and immediately contact the carrier (i.e., UPS, U.S. Postal Service, truck line) to file a damage claim. *Please do not return* damaged items to NPD®. We will, however, be happy to assist you in filing your claim with the carrier.

General policy on core returns: ✔ Returned core must be rebuild-able. ✔ No broken or missing parts, cracked cases, deeply grooved surfaces etc. ✔ Moveable items must not be frozen, locked or rusted solid. ✔ No cases with torch cuts. ✔ No welded or bent shafts, ears etc. ✔ Shafts, splines, keyways & threads must be good. ✔ No disassembled cores credited. ✔ Returned core must be same part as rebuilt unit purchased. ✔ Returned core **must** be returned in same box as rebuilt unit purchased. ✔ Drain all fluids prior to return and wrap in plastic to prevent leakage. ✔ Core returnability will be determined by the remanufacturer and/or NPD®.
Core charges do not reflect the value of the part, they are an incentive to return the part to us. **Junk parts** sent as cores **cannot** be returned and **will not receive** core credit.

Returns-our guarantee: If you are dissatisfied with an item, please contact the salesperson listed on your invoice to obtain return authorization. **Missing or damaged items must be reported within 24 hours of delivery.** After speaking with our agent, we request that you also enclose a brief note describing the problem with the returned merchandise. We will accept the return of any unsatisfactory item provided it is unused, in resalable condition and returned with a copy of your invoice within 30 days of the invoice date. Return of items ordered in error may be subject to a 20% restocking fee. Fluids must be drained prior to return. Please do not return merchandise to us C.O.D. or postage due. Electrical parts, stripes, literature, items sold per foot (windlace, conduit, PS hose) and videos are not returnable. If NPD® is at fault in any way we will promptly refund your return freight charges. NPD® is NOT responsible for air-freight charges or boxing/packing services. Only UPS ground rates apply.

Important Notice

By placing this order with Auto Craft Investments Inc. (d/b/a National Parts Depot) customer agrees to the following terms and conditions regarding venue for any dispute arising out of this transaction.
1) Unless otherwise prohibited by law, venue is limited to one of the following locations: Ocala Florida, Canton Michigan, Ventura California, Charlotte North Carolina.
2) All disputes will be settled by application of the laws of the specific state that is selected for venue.

Thanks: NPD® has been growing steadily since its founding in 1976. We are proud to be one of the largest firms of our kind, and we're even prouder of our reputation for first-rate customer service. Please don't hesitate to tell us if you feel there is any way we can improve our service, product line or catalog.

The seller, National Parts Depot, hereby disclaims all warranties, either expressed or implied, including any warranty of mechantability or fitness for a particular purpose, and National Parts Depot hereby neither assumes nor authorizes any person to assume for it any liability in connection with the sale of this merchandise.

Vehicle Information	Year	BRONCO	Additional info	Have you ordered from NPD® before? ❍ Yes ❍ No Bronco Fifth edition
Cab (circle): Pickup, Wagon, Sport	4x2 4x4	Engine, Trans, axle and other info		Source Code

QTY	Item Number	Description: LH (driver)/ RH (pass), Color, Bodystyle	Price		Price X Qty	

Customer Information:

▲ Name

▲ Home Address (UPS will not deliver to a Post Office Box)

▲ City ▲ State or Providence ▲ Zip Code

( ) - - ( ) - -

▲ Home Phone - include area code ▲ Office or Daytime Phone - include area code

*FREE Shipping on UPS orders over $300

▼ If Shipping Address is Different From Above Please Complete Below ▼

▲ Name ▲ Company Name or In Care Of:

▲ Shipping Address (if different from home address) Note:UPS will not deliver to a Post Office Box

▲ City ▲ State or Providence ▲ Zip Code

Payment Method: (✓ check appropriate box)

☐MasterCard ☐ VISA ☐ Discover ☐ AMEX ☐WesternUnion ☐Postal money order

▼ CREDIT CARD NUMBER

▲Security Code (3-4 digit code found on back of card)

I have read the ordering policies and information section on the reverse side of this order form.

EXP DATE MONTH / YEAR

AUTHORIZING SIGNATURE - *required* ▲ Please make checks payable to: National Parts Depot

SUBTOTAL	
TAX Residents in MI add 6%, FL 6.5%, NC 7.5%, CA 7.25%	
Shipping * $8.00 minimum AK, HI, PR, Foreign: Actual shipping** FL, CA, MI, NC residents: add 5% ALL OTHER STATES: add 10%	FREE shipping on UPS orders over $300.00 See shipping note below
Canadian shipments:add 20%	
Oversize charges	
GRAND TOTAL	

Need a new catalog for yourself or a friend?
✓ Check box for yes.

- ☐1948-1979 Ford F-series Truck
- ☐1980-1996 Ford F-series Truck
- ☐1966-1996 Ford Bronco
- ☐1965-1973 Ford Mustang
- ☐1955-1957 Ford Thunderbird
- ☐1967-1981 Chevrolet Camaro
- ☐1967-1981 Pontiac Firebird
- ☐1964-1987 Chevrolet Chevelle, El Camino
- ☐ALL on CD in PDF format



***Shipping reminder:** We pay the shipping on UPS-able ground orders exceeding $300 and destined within the lower 48 states, except on items noted. Core charges do not count towards free UPS shipping, or in calculating freight charges. Items too large for UPS must be shipped by an LTL carrier. Call the NPD location closest to you for the best freight quote.

****Alaska, Hawaii, Puerto Rico & foriegn orders are charged actual cost of shipping the order. See ordering policies on reverse side for details of shipping rates and for special Canadian shipping charges.**

The seller, National Parts Depot, hereby expressly disclaims all warranties, either expressed or implied, including any implied warranty of mechantability or fitness for a particular purpose, and National Parts Depot hereby neither assumes nor authorizes any other person to assume for it any liability in connection with the sale of the merchandise.

 Order toll free 24 hrs a day, 7 days a week! **Michigan Depot** local 734-397-4569, tollfree 800-521-6104

Ordering Policies & Information

All Toll-free Lines Open 24-hours a day!

Walk-in hours: Mon-Fri 8am-9pm; Sat & Sun 8am-5pm



Florida Depot
900 S.W. 38th Ave.,
Ocala, FL 34474-1883
Local **352-861-8700**
Toll-free all states..... **800-874-7595**
Fax **352-861-8706**



N.Carolina Depot
7000 MacFarlane Blvd,
Charlotte, NC 28262-3425
Local **704-331-0900**
Toll-free all states..... **800-368-6451**
Fax **704-335-8866**



Michigan Depot
2435 S. Haggerty Road,
Canton, MI 48188-2021
Local **734-397-4569**
Toll-free all states..... **800-521-6104**
Fax **734-397-4683**

To order: Simply phone or mail your order to our store nearest you. Experienced classic parts specialists will handle your order and provide assistance. Be sure to supply us with our item numbers for faster order handling. Some items are ordered by description alone (i.e., upholstery) in which case we'll need the year, color and bodystyle of your vehicle. All orders may be paid by VISA, MasterCard, Discover, Amex or Western Union "Quick Collect". Mail orders may also be paid with a cashiers check. Personal checks may delay your order 2-3 weeks. **Foreign orders:** (outside the territorial U.S. or Canada) contact our Foreign Order Desk at at our Florida Depot or E-mail at "export@npdlink.com".

Shipping charges: Orders over $300.00 and destined within the lower 48 states: We pay the UPS ground-shipping charges. (Western Union fee not included; core charges do not count towards free shipping calculation.) Items that are UPS oversize 1 or 2 (most items denoted as "OS" in catalog) will be subject to an additional $12.00 per item and are not included in the free shipping offer.

Orders below $300.00 and destined within the lower 48 states: Florida, California, Michigan or North Carolina residents add 5%, but not less than our $8.00 minimum. Residents of all other states add 10%, but not less than our $8.00 minimum. Do not include core charges when calculating shipping charge. • Items that are UPS oversize 1 or 2 (most items denoted as "OS" in catalog) will be subject to an additional $12.00 per item and are not included in the free shipping offer.

Orders destined for Canada: Add 20% for shipping but not less than $15.00 for minimum shipping. Oversized items will be subject to an additional $12.00 per item. The $300.00 free shipping policy does not apply. US funds only.

Orders destined outside the lower 48 states and Canada: We will charge the actual cost of shipping your order. The $300.00 free shipping policy does not apply. US funds only.

Items too large for UPS such as hoods or fenders must be shipped by an LTL carrier. Call the NPD location closest to you for the best freight quote.

Optional shipping methods: UPS 3-Day Guaranteed Ground, 2nd Day Air, Next Day Air, FedEx and parcel post shipping is available at actual cost. Rates vary according to weight.

Paying by Western Union "Quick Collect": This convenient new payment method eliminates the unpopular hassles of C.O.D. transactions. No more waiting in long bank lines for cashiers checks, hanging around the house to meet UPS drivers or paying multiple COD charges for multi-box orders. **How does Quick Collect work?** When you place your order by phone, fax or mail, an NPD® sales representitive will provide you with a total amount due, a city code number and our invoice number. Go to your nearest Western Union outlet (*They're everywhere! Call 800-325-6000 for the one nearest you*) and fill out a blue **"Quick Collect"** form, completing the required information, along with the numbers we provide. You'll pay for your entire order right there in cash and Western Union will charge an additional $12.95. Shortly afterward, a check for your order will be printed out at our office and your shipment will be on its way.

Catalog pricing: All prices are current at the time of printing. Prices, specifications, stated suppliers or manufacturers are subject to change without notice.

Backorders: We attempt to fill every order within 24-hours, but if an item is out of stock it will be placed on our backorder service and shipped as soon as possible. Most customers prefer to pay for backordered items at the time the order is initially processed, however, if you do not wish to pay for backordered items until they are shipped, or you wish to cancel an existing backorder to receive a refund, simply advise your salesperson.

Refused shipments: Shipping or other costs incurred by us while attempting to deliver merchandise that is refused will be billed to the customer.

Store hours: All NPD® Toll-free order lines are open 24 hours a day, 7 days a week. Our walk-in counters are open M-F 8am-9pm; Sat & Sun 8am-5pm. We are closed for the observance of New Years, Memorial Day, Independence Day, Labor Day, Thanksgiving and Christmas. Abbreviated store hours on Christmas Eve and New Years Eve.

Items Damaged in transit are the responsibility of the carrier. Please retain all packing materials and immediately contact the carrier (i.e., UPS, U.S. Postal Service, truck line) to file a damage claim. *Please do not return* damaged items to NPD®. We will, however, be happy to assist you in filing your claim with the carrier.

General policy on core returns: ✔ Returned core must be rebuild-able. ✔ No broken or missing parts, cracked cases, deeply grooved surfaces etc. ✔ Moveable items must not be frozen, locked or rusted solid. ✔ No cases with torch cuts. ✔ No welded or bent shafts, ears etc. ✔ Shafts, splines, keyways & threads must be good. ✔ No disassembled cores credited. ✔ Returned core must be same part as rebuilt unit purchased. ✔ Returned core **must** be returned in same box as rebuilt unit purchased. ✔ Drain all fluids prior to return and wrap in plastic to prevent leakage. ✔ Core returnability will be determined by the remanufacturer and/or NPD®.
Core charges do not reflect the value of the part, they are an incentive to return the part to us. **Junk parts** sent as cores **cannot** be returned and **will not receive** core credit.

Returns-our guarantee: If you are dissatisfied with an item, please contact the salesperson listed on your invoice to obtain return authorization. **Missing or damaged items must be reported within 24 hours of delivery.** After speaking with our agent, we request that you also enclose a brief note describing the problem with the returned merchandise. We will accept the return of any unsatisfactory item provided it is unused, in resalable condition and returned with a copy of your invoice within 30 days of the invoice date. Return of items ordered in error may be subject to a 20% restocking fee. Fluids must be drained prior to return. Please do not return merchandise to us C.O.D. or postage due. Electrical parts, stripes, literature, items sold per foot (windlace, conduit, PS hose) and videos are not returnable. If NPD® is at fault in any way we will promptly refund your return freight charges. NPD® is NOT responsible for air-freight charges or boxing/packing services. Only UPS ground rates apply.

Important Notice
By placing this order with Auto Craft Investments Inc. (d/b/a National Parts Depot) customer agrees to the following terms and conditions regarding venue for any dispute arising out of this transaction.
1) Unless otherwise prohibited by law, venue is limited to one of the following locations: Ocala Florida, Canton Michigan, Ventura California, Charlotte North Carolina.
2) All disputes will be settled by application of the laws of the specific state that is selected for venue.

Thanks: NPD® has been growing steadily since its founding in 1976. We are proud to be one of the largest firms of our kind, and we're even prouder of our reputation for first-rate customer service. Please don't hesitate to tell us if you feel there is any way we can improve our service, product line or catalog.

The seller, National Parts Depot, hereby disclaims all warranties, either expressed or implied, including any warranty of mechantability or fitness for a particular purpose, and National Parts Depot hereby neither assumes nor authorizes any person to assume for it any liability in connection with the sale of this merchandise.

Vehicle Information	Year	BRONCO	Additional info	Have you ordered from NPD® before? ❍ Yes ❍ No Bronco Fifth edition
Cab (circle): Pickup, Wagon, Sport	4x2 4x4	Engine, Trans, axle and other info		Source Code

QTY	Item Number	Description: LH (driver)/ RH (pass), Color, Bodystyle	Price		Price X Qty	

Customer Information:

▲ Name

▲ Home Address (UPS will not deliver to a Post Office Box)

▲ City ▲ State or Providence ▲ Zip Code

( ) - - ( ) - -

▲ Home Phone - include area code ▲ Office or Daytime Phone - include area code

*FREE Shipping on UPS orders over $300

▼ If Shipping Address is Different From Above Please Complete Below ▼

▲ Name ▲ Company Name or In Care Of:

▲ Shipping Address (if different from home address) Note:UPS will not deliver to a Post Office Box

▲ City ▲ State or Providence ▲ Zip Code

SUBTOTAL		
TAX	Residents in MI add 6%, FL 6.5%, NC 7.5%, CA 7.25%	
Shipping * $8.00 minimum	FREE shipping on UPS orders over $300.00 See shipping note below	
AK, HI, PR, Foreign: Actual shipping**		
FL, CA, MI, NC residents: add 5%		
ALL OTHER STATES: add 10%		
Canadian shipments:add 20%		
Oversize charges		
GRAND TOTAL		

Payment Method: (✓ check appropriate box)

☐MasterCard ☐ VISA ☐ Discover ☐ AMEX ☐WesternUnion ☐Postal money order

▼ CREDIT CARD NUMBER

▲Security Code (3-4 digit code found on back of card)

I have read the ordering policies and information section on the reverse side of this order form.

EXP DATE MONTH / YEAR

AUTHORIZING SIGNATURE - *required* ▲ Please make checks payable to: National Parts Depot

Need a new catalog for yourself or a friend? ✓ Check box for yes.

- ☐1948-1979 Ford F-series Truck
- ☐1980-1996 Ford F-series Truck
- ☐1966-1996 Ford Bronco
- ☐1965-1973 Ford Mustang
- ☐1955-1957 Ford Thunderbird
- ☐1967-1981 Chevrolet Camaro
- ☐1967-1981 Pontiac Firebird
- ☐1964-1987 Chevrolet Chevelle, El Camino
- ☐ALL on CD in PDF format



***Shipping reminder:** We pay the shipping on UPS-able ground orders exceeding $300 and destined within the lower 48 states, except on items noted. Core charges do not count towards free UPS shipping, or in calculating freight charges. Items too large for UPS must be shipped by an LTL carrier. Call the NPD location closest to you for the best freight quote.

****Alaska, Hawaii, Puerto Rico & foriegn orders are charged actual cost of shipping the order. See ordering policies on reverse side for details of shipping rates and for special Canadian shipping charges.**

The seller, National Parts Depot, hereby expressly disclaims all warranties, either expressed or implied, including any implied warranty of mechantability or fitness for a particular purpose, and National Parts Depot hereby neither assumes nor authorizes any other person to assume for it any liability in connection with the sale of the merchandise.

 Order toll free 24 hrs a day, 7 days a week! **Michigan Depot** local 734-397-4569, tollfree 800-521-6104